TDA9882

Alignment-free multistandard vision and QSS FM sound IF PLL demodulator

Rev. 01 — 16 November 2004 Product data sheet

1. General description

The TDA9882 is an alignment-free multistandard (PAL, SECAM and NTSC) vision and sound IF signal PLL demodulator for positive and negative modulation, including Quasi Split Sound (QSS) FM and AM sound processing.

2. Features

- 5 V supply voltage
- Gain controlled wideband Vision Intermediate Frequency (VIF) amplifier; AC-coupled
- Multistandard true synchronous demodulation with active carrier regeneration: very linear demodulation, good intermodulation figures, reduced harmonics and excellent pulse response
- Gated phase detector for L and L-accent standard
- Fully integrated VIF Voltage Controlled Oscillator (VCO), alignment-free, frequencies switchable via logic pin VIF0 and pin QSSO with resistor for negative and positive modulated standards
- Digital acquisition help circuit, VIF frequencies of 38.9 MHz and 45.75 MHz (negative modulation); 38.9 MHz and 33.9 MHz (positive modulation)
- 4 MHz reference frequency input signal from Phase-Locked Loop (PLL) tuning system or operating as crystal oscillator
- VIF Automatic Gain Control (AGC) detector for gain control; operating as peak sync detector for negative modulated signals and as a peak white detector for positive modulated signals
- VIF AGC monitor output at pin VAGC
- Precise fully digital Automatic Frequency Control (AFC) detector with 4-bit digital-to-analog converter
- TakeOver Point (TOP) adjustable with potentiometer
- Fully integrated sound carrier trap for 4.5 MHz, 5.5 MHz, 6.0 MHz and 6.5 MHz; controlled by FM PLL oscillator
- Sound IF (SIF) input for single reference Quasi Split Sound (QSS) mode; PLL controlled
- SIF AGC for gain controlled SIF amplifier; single reference QSS mixer able to operate in high performance single reference QSS mode
- AM sound demodulator without extra reference circuit
- Alignment-free selective FM PLL demodulator with high linearity and low noise.

PHILIPS

3. Applications

- TV, VTR, PC and Set-Top Box (STB) applications.

4. Quick reference data

Table 1: Quick reference data

Symbol	Parameter	Conditions		Min	Typ	Max	Unit
V_P	supply voltage		[1] [2]	4.5	5.0	5.5	V
I_P	supply current			52	63	70	mA
Video part							
$V_{i(VIF)(rms)}$	VIF input voltage sensitivity (RMS value)	–1 dB video at output		-	60	100	µV
$G_{VIF(cr)}$	VIF gain control range	see Figure 6		60	66	-	dB
f_{VIF}	vision carrier operating frequencies	see Table 4		-	33.9	-	MHz
				-	38.9	-	MHz
				-	45.75	-	MHz
Δf_{VIF}	VIF frequency window of digital acquisition help	related to f_{VIF}; see Figure 9		-	±2.3	-	MHz
$V_{o(video)(p-p)}$	video signal output voltage (peak-to-peak value)	see Figure 4		1.7	2.0	2.3	V
G_{dif}	differential gain	*"CCIR 330"*	[3]				
		B/G standard		-	-	5	%
		L standard		-	-	7	%
φ_{dif}	differential phase	*"CCIR 330"*		-	2	4	deg
$B_{video(-3dB)(trap)}$	–3 dB video bandwidth including sound carrier trap	f_{trap} = 4.5 MHz	[4]	3.95	4.05	-	MHz
		f_{trap} = 5.5 MHz	[4]	4.90	5.00	-	MHz
		f_{trap} = 6.0 MHz	[4]	5.40	5.50	-	MHz
		f_{trap} = 6.5 MHz	[4]	5.50	5.95	-	MHz
α_{SC1}	trap attenuation at first sound carrier	M/N standard		26	36	-	dB
		B/G standard		26	36	-	dB
$S/N_{W(video)}$	weighted signal-to-noise ratio of video signal	weighted in accordance with *"CCIR 567"*; see Figure 10	[5]	55	-	-	dB
$PSRR_{CVBS}$	power supply ripple rejection at pin CVBS	f_{ripple} = 70 Hz; see Figure 5	[6]	20	25	-	dB
AFC_{stps}	AFC control steepness	definition: $\Delta I_{AFC}/\Delta f_{VIF}$		0.85	1.05	1.25	µA/kHz
Audio part							
$V_{o(AF)(rms)}$	AF output voltage (RMS value)	27 kHz FM deviation; 50 µs de-emphasis		430	540	650	mV
		54 % AM modulation		400	500	600	mV
THD	total harmonic distortion of audio signal	FM: 27 kHz FM deviation; 50 µs de-emphasis		-	0.15	0.50	%
		AM: m = 54 %		-	0.5	1.0	%

© Koninklijke Philips Electronics N.V. 2004. All rights reserved.

Table 1: Quick reference data *...continued*

Symbol	Parameter	Conditions		Min	Typ	Max	Unit
$B_{AF(-3dB)}$	–3 dB AF bandwidth	without de-emphasis; dependent on FM PLL filter		80	100	-	kHz
$S/N_{W(AF)}$	weighted signal-to-noise ratio of audio signal	FM: 27 kHz FM deviation; 50 µs de-emphasis; vision carrier unmodulated		52	56	-	dB
		AM: m = 54 %		45	50	-	dB
$\alpha_{AM(sup)}$	AM suppression of FM demodulator	50 µs de-emphasis; AM: f = 1 kHz and m = 54 %; referenced to 27 kHz FM deviation		40	46	-	dB
$PSRR_{AUD}$	power supply ripple rejection on pin AUD	f_{ripple} = 70 Hz; see Figure 5					
		for AM		20	26	-	dB
		for FM		14	20	-	dB
$V_{o(intc)(rms)}$	IF intercarrier output level (RMS value)	SC_1; SC_2 off		90	140	210	mV
Reference frequency							
f_{ref}	reference signal frequency		[7]	-	4	-	MHz
$V_{ref(rms)}$	reference signal voltage (RMS value)	operation as input terminal		80	-	400	mV

[1] Values of video and sound parameters can be decreased at V_P = 4.5 V.

[2] The time constant (R × C) at the supply must be > 1.2 µs (e.g. 1 Ω and 2.2 µF).

[3] Condition: luminance range (5 steps) from 0 % to 100 %.

[4] AC load: C_L < 20 pF and R_L > 1 kΩ. The sound carrier frequencies (depending on the TV standard) are attenuated by the integrated sound carrier traps (see Figure 12 to Figure 17; |H(s)| is the absolute value of the transfer function).

[5] $S/N_{W(video)}$ is the ratio of the black-to-white amplitude to the black level noise voltage (RMS value measured on pin CVBS). B = 5 MHz (B/G, I and D/K standard). Noise analyzer setting: 200 kHz high-pass and SC-trap switched on.

[6] Conditions: video signal, grey level and negative modulation.

[7] Pin REF is able to operate as a 1-pin crystal oscillator input as well as an external reference signal input, e.g. from the tuning system.

5. Ordering information

Table 2: Ordering information

Type number	Package		
	Name	Description	Version
TDA9882TS	SSOP24	plastic shrink small outline package; 24 leads; body width 5.3 mm	SOT340-1
TDA9882HN	HVQFN32	plastic thermal enhanced very thin quad flat package; no leads; 32 terminals; body 5 × 5 × 0.85 mm	SOT617-3

© Koninklijke Philips Electronics N.V. 2004. All rights reserved.

6. Block diagram

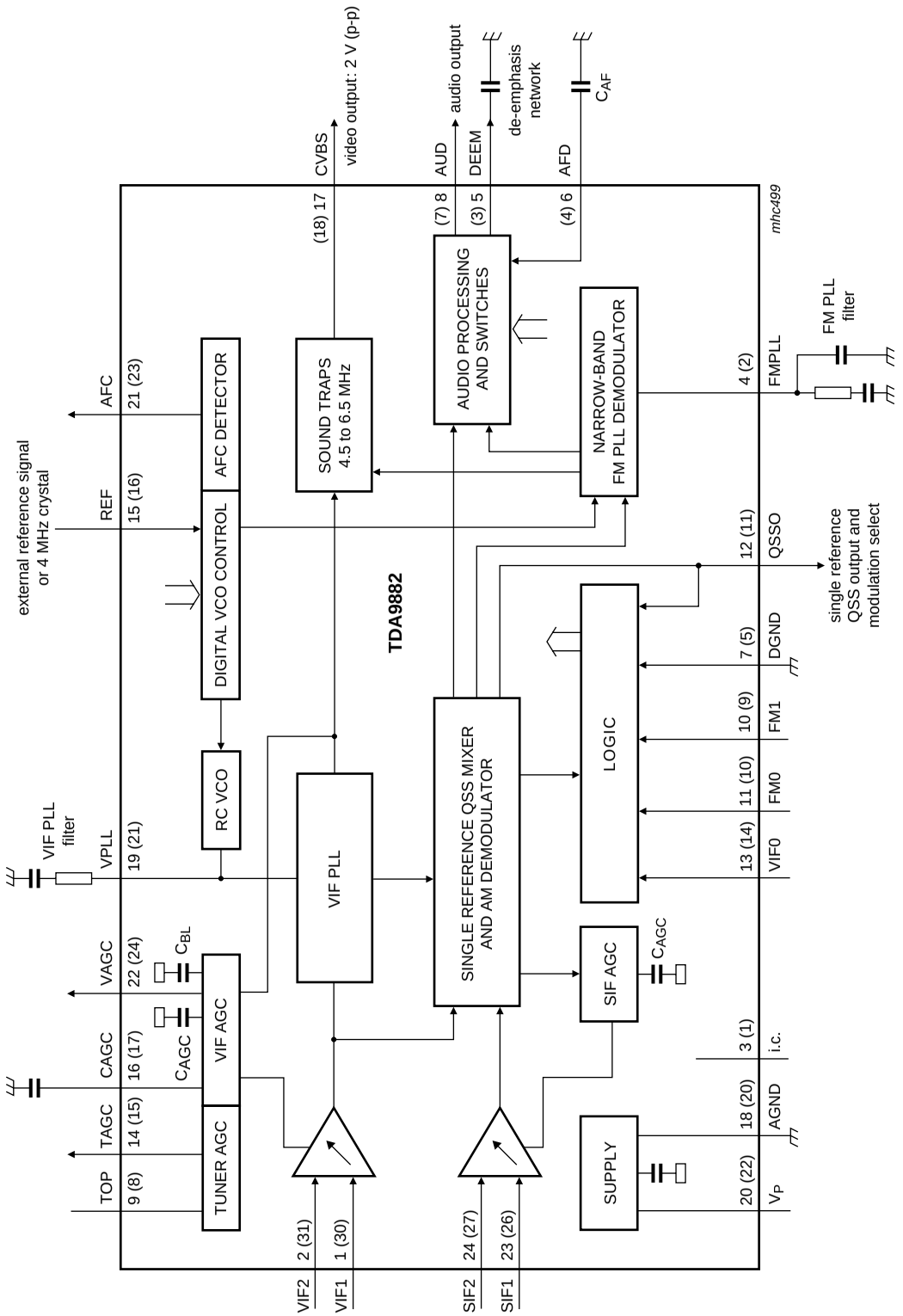

Pin numbers for TDA9882HN in parenthesis.

Fig 1. Block diagram.

© Koninklijke Philips Electronics N.V. 2004. All rights reserved.

7. Pinning information

7.1 Pinning

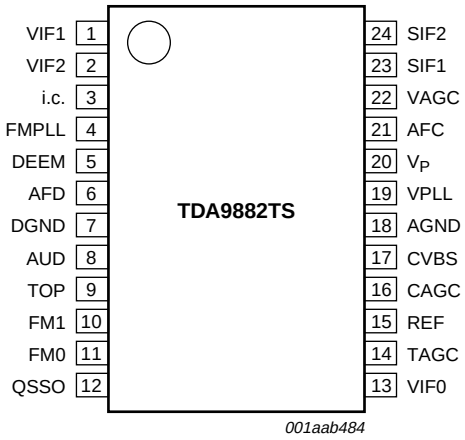

Fig 2. Pin configuration for SSOP24.

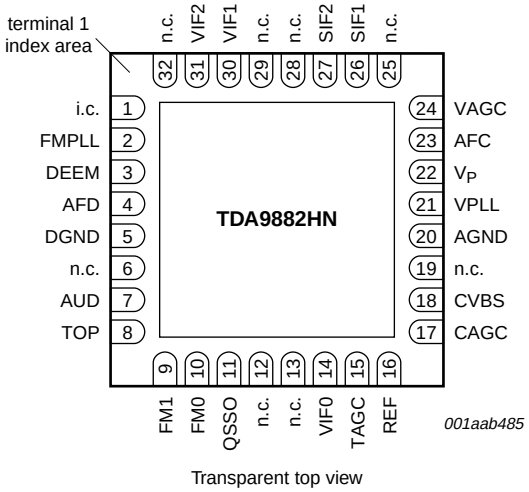

Transparent top view

Fig 3. Pin configuration for HVQFN32.

© Koninklijke Philips Electronics N.V. 2004. All rights reserved.

7.2 Pin description

Table 3: Pin description

Symbol	Pin		Description
	TDA9882TS	TDA9882HN	
VIF1	1	30	VIF differential input 1
VIF2	2	31	VIF differential input 2
n.c.	-	32	not connected
i.c.	3	1	internally connected; leave open
FMPLL	4	2	FM PLL for loop filter
DEEM	5	3	de-emphasis output for capacitor
AFD	6	4	AF decoupling input for capacitor
DGND	7	5	digital ground
n.c.	-	6	not connected
AUD	8	7	audio output
TOP	9	8	tuner AGC TakeOver Point (TOP) for resistor adjustment
FM1	10	9	FM IF select bit 1
FM0	11	10	FM IF select bit 0
QSSO	12	11	single reference QSS output and modulation select with resistor
n.c.	-	12	not connected
n.c.	-	13	not connected
VIF0	13	14	vision IF select bit 0
TAGC	14	15	tuner AGC output
REF	15	16	4 MHz crystal or reference signal input
CAGC	16	17	VIF AGC capacitor for L standard
CVBS	17	18	composite video output
n.c.	-	19	not connected
AGND	18	20	analog ground
VPLL	19	21	VIF PLL for loop filter
V_P	20	22	supply voltage
AFC	21	23	AFC output
VAGC	22	24	vision AGC output
n.c.	-	25	not connected
SIF1	23	26	SIF differential input 1 and auto mute select with resistor
SIF2	24	27	SIF differential input 2 and auto mute select with resistor
n.c.	-	28	not connected
n.c.	-	29	not connected

© Koninklijke Philips Electronics N.V. 2004. All rights reserved.

8. Functional description

A simplified block diagram of the device is illustrated in Figure 1. The device contains the following functional blocks:

1. VIF amplifier
2. Tuner AGC and VIF AGC
3. VIF AGC detector
4. Frequency Phase-Locked Loop (FPLL) detector
5. VCO and divider
6. AFC and digital acquisition help circuit
7. Video demodulator and amplifier
8. Sound carrier trap
9. SIF amplifier
10. SIF AGC detector
11. Single reference QSS mixer
12. AM demodulator
13. FM demodulator and acquisition help circuit
14. Audio amplifier and mute time constant
15. Internal voltage stabilizer
16. Logic.

8.1 VIF amplifier

The VIF amplifier consists of three AC-coupled differential stages. Gain control is performed by emitter degeneration. The total gain control range is typical 66 dB. The differential input impedance is typical 2 kΩ in parallel with 3 pF.

8.2 Tuner AGC and VIF AGC

This block adapts the voltage, generated at the VIF AGC detector, to the internal signal processing at the VIF amplifier and performs the tuner AGC control current generation. The onset of the tuner AGC control current generation can be set by a potentiometer at pin TOP.

8.3 VIF AGC detector

Gain control is performed using sync level detection (negative modulation) or peak white detection (positive modulation).

For negative modulation, the sync level voltage is stored in an integrated capacitor by means of a fast peak detector. This voltage is compared with a reference voltage (nominal sync level) by a comparator which charges or discharges the integrated AGC capacitor to generate the VIF gain. The time constants for decreasing or increasing the gain are nearly equal and the total AGC reaction time is fast, to cope with ‘aeroplane fluttering’.

© Koninklijke Philips Electronics N.V. 2004. All rights reserved.

For positive modulation, the white peak level voltage is compared with a reference voltage (nominal white level) by a comparator which charges (fast) or discharges (slow) the external AGC capacitor directly for the generation of the required VIF gain. The need of a very large time constant for VIF gain increase is caused by the fact that the peak white level may appear only once in a field. In order to reduce this time constant, an additional level detector increases the discharging current of the AGC capacitor (fast mode) in the event of a decreasing VIF amplitude step controlled by the detected actual black level voltage. The threshold level for fast mode AGC is typical −6 dB video amplitude. The fast mode state is also transferred to the SIF AGC detector for speed-up. In case of missing peak white pulses, the VIF gain increase is limited to typical 3 dB by comparing the detected actual black level voltage with a corresponding reference voltage.

8.4 FPLL detector

The VIF amplifier output signal is fed to a frequency detector and a phase detector via a limiting amplifier to remove the video AM.

During acquisition the frequency detector produces a current that is proportional to the frequency difference between the VIF and the VCO signal. After frequency lock-in the phase detector produces a current that is proportional to the phase difference between the VIF and the VCO signal. The currents from the frequency and phase detector are charged into the loop filter which controls the VIF VCO and locks it to the frequency and phase of the VIF carrier.

For a positive modulated VIF signal, the charging currents are gated by the composite sync in order to avoid signal distortion in case of overmodulation. The gating depth is set to 0 %.

8.5 VCO and divider

The VCO of the VIF FPLL operates as an integrated low radiation relaxation oscillator at twice the picture carrier frequency. The control voltage, required to tune the VCO to actually double the picture carrier frequency, is generated at the loop filter by the frequency phase detector. The possible frequency range is 50 MHz to 140 MHz (typical value).

The oscillator frequency is divided-by-two to provide two differential square wave signals with exactly 90 degrees phase difference, independent of the frequency, for use in the FPLL detectors, the video demodulator and the single reference QSS mixer.

8.6 AFC and digital acquisition help circuit

Each relaxation oscillator of the VIF PLL and FM PLL demodulator has a wide frequency range. To prevent false locking of the PLLs, with respect to the catching range, the digital acquisition help circuit provides an individual control until the frequency of the VCO is within the preselected standard dependent lock-in window of the PLL.

The VIF carrier frequencies 38.9 MHz (M/N, B/G, I, D/K and L standard), 45.75 MHz (NTSC standard) and 33.9 MHz (L-accent standard) can be selected via pin VIF0 and pin QSSO with resistor; see Table 4.

The FM carrier frequencies can be selected via pin FM0 and pin FM1; see Table 5.

© Koninklijke Philips Electronics N.V. 2004. All rights reserved.

The in-window and out-window control at the FM PLL can additionally be used to mute the audio stage (if auto mute is selected via pins SIF1 and SIF2); see Table 6.

The principle working of the digital acquisition help circuit is as follows: The PLL VCO output is connected to a downcounter which has a predefined start value (standard dependent). The VCO frequency clocks the downcounter for a fixed gate time. Thereafter, the downcounter stop value is analyzed. In the event that the stop value is higher (lower) than the expected value range, the VCO frequency will be lower (higher) than the required lock-in window frequency range. A positive (negative) control current is injected into the PLL loop filter which causes the VCO frequency to be increased (decreased) and a new counting cycle starts.

The gate time as well as the control logic of the acquisition help circuit is dependent on the precision of the reference signal at pin REF. Operation as a crystal oscillator is possible as well as connecting this input via a serial capacitor to an external reference frequency e.g. the tuning system oscillator.

The AFC signal is derived from the corresponding downcounter stop value after a counting cycle. The last four bits are latched and the digital-to-analog converted value is given as current at pin AFC.

8.7 Video demodulator and amplifier

The video demodulator is realized by a multiplier which is designed for low distortion and large bandwidth. The VIF signal is multiplied with the ‘in phase’ signal of the VIF PLL VCO.

The demodulator output signal is fed into the video preamplifier via a level shift stage with integrated low-pass filter to achieve carrier harmonics attenuation.

The output signal of the preamplifier is fed to the VIF AGC detector (see Section 8.3) and also fed internally to the integrated sound carrier trap; see Section 8.8. The differential trap output signal is converted and amplified by the following postamplifier. The video output level at pin CVBS is 2 V (p-p).

Noise clipping is provided.

8.8 Sound carrier trap

The sound carrier trap consists of a reference filter, a phase detector and the sound trap itself.

A sound carrier reference signal is fed into the reference low-pass filter and is shifted by nominal 90 degrees. The phase detector compares the original reference signal with the signal shifted by the reference filter and produces a DC voltage by charging or discharging an integrated capacitor with a current proportional to the phase difference between both signals, respectively to the frequency error of the integrated filters. The DC voltage controls the frequency position of the reference filter and the sound trap. Thus the accurate frequency position for the different standards is set by the sound carrier reference signal.

The sound trap itself is constructed of three separate traps to realize sufficient suppression of the first and second sound carrier.

© Koninklijke Philips Electronics N.V. 2004. All rights reserved.

8.9 SIF amplifier

The SIF amplifier consists of three AC-coupled differential stages. Gain control is performed by emitter degeneration. The total gain control range is typical 66 dB. The differential input impedance is typical 2 kΩ in parallel with 3 pF.

8.10 SIF AGC detector

SIF gain control is performed by the detection of the DC component of the AM demodulator output signal. This DC signal is directly corresponding to the SIF voltage at the output of the SIF amplifier so that a constant SIF signal is supplied to the AM demodulator and to the single reference QSS mixer.

By switching the gain of the input amplifier of the SIF AGC detector dependent on modulation select, the internal SIF level for FM sound is 5.5 dB lower than for AM sound. This is done to adapt the SIF AGC characteristic to the VIF AGC characteristic. The adaption is ideal for a picture-to-sound FM carrier ratio of 13 dB.

Via a comparator the integrated AGC capacitor is charged or discharged for the generation of the required SIF gain. Due to AM sound, the AGC reaction time is slow (f_c < 20 Hz for the closed AGC loop). For reducing this AM sound time constant in the event of a decreasing IF amplitude step, the load current of the AGC capacitor is increased (fast mode) when the VIF AGC detector (at positive modulation mode) operates in the fast mode too. An additional circuit (threshold approximately 7 dB) ensures a very fast gain reduction for a large increasing IF amplitude step.

8.11 Single reference QSS mixer

With the present system high performance Hi-Fi stereo sound processing can be achieved.

The single reference QSS mixer generates the 2nd FM TV sound intercarrier signal. It is realized by a linear multiplier which multiplies the SIF amplifier output signal and the VIF PLL VCO signal which is locked to the picture carrier.

The QSS mixer output signal is fed internally via a high-pass and low-pass combination to the FM demodulator as well as via an operational amplifier to the QSS output pin QSSO.

8.12 AM demodulator

The amplitude modulated SIF amplifier output signal is fed both to a two-stage limiting amplifier for removing the AM and to a linear multiplier. The result of the multiplication of the SIF signal with the limiter output signal is AM demodulation (passive synchronous demodulator). The demodulator output signal is fed via a low-pass filter for the attenuation of carrier harmonics and via the input amplifier of the SIF AGC detector to the audio amplifier.

8.13 FM demodulator and acquisition help circuit

The narrow-band FM PLL detector consists of:

- Gain controlled FM amplifier and AGC detector
- Narrow-band PLL.

© Koninklijke Philips Electronics N.V. 2004. All rights reserved.

The intercarrier signal from the single reference QSS mixer is fed to the input of an AC-coupled gain controlled amplifier with two stages. The gain controlled output signal is fed to the phase detector of the narrow-band FM PLL (FM demodulator). For good selectivity and robustness against disturbance caused by the video signal, a high linearity of the gain controlled FM amplifier and of the phase detector as well as a constant signal level are required. The gain control is done by means of an 'in phase' demodulator for the FM carrier (from the output of the FM amplifier). The demodulation output is fed into a comparator for charging or discharging the integrated AGC capacitor. This leads to a mean value AGC loop to control the gain of the FM amplifier.

The FM demodulator is realized as a narrow-band PLL with an external loop filter, which provides the necessary selectivity (bandwidth approximately 100 kHz). To achieve good selectivity, a linear phase detector and a constant input level are required. The gain controlled intercarrier signal from the FM amplifier is fed to the phase detector. The phase detector controls, via the loop filter, the integrated low radiation relaxation oscillator. The designed frequency range is from 4 MHz to 7 MHz.

The VCO within the FM PLL is phase-locked to the incoming 2nd SIF signal which is frequency modulated. The VCO control voltage is superimposed by the AF voltage. Therefore, the VCO tracks with the FM of the 2nd SIF signal. Thus, the AF voltage is present at the loop filter and is typically 5 mV (RMS) for 27 kHz FM deviation. This AF signal is fed via a buffer to the audio amplifier.

The correct locking of the PLL is supported by the digital acquisition help circuit; see Section 8.6.

8.14 Audio amplifier and mute time constant

The audio amplifier consists of two parts:

- AF preamplifier
- AF output amplifier.

The AF preamplifier used for FM sound is an operational amplifier with internal feedback, high gain and high common mode rejection. The AF voltage from the PLL demodulator is 5 mV (RMS) for a frequency deviation of 27 kHz and is amplified by 30 dB. By using a DC operating point control circuit (with external capacitor C_{AF}), the AF preamplifier is decoupled from the PLL DC voltage. The low-pass characteristic of the amplifier reduces the harmonics of the sound intercarrier signal at the AF output terminal.

For FM sound a switchable de-emphasis network (with external capacitor) is implemented between the preamplifier and the output amplifier. The de-emphasis time constant with 50 μs or 75 μs depends on the FM carrier selection via pins FM0 and FM1; see Table 5.

The AF output amplifier provides the required AF output level by a rail-to-rail output stage. A preceding stage makes use of an input selector for switching between the FM sound, AM sound and mute state.

Switching to the mute state is controlled automatically, depending on the digital acquisition help circuit should the VCO of the FM PLL not be in the required frequency window. This is done by a time constant: fast for switching to the mute state and slow (typically 40 ms) for switching to the non-mute state.

Auto mute can be disabled via pins SIF1 and SIF2 with resistor; see Table 6.

© Koninklijke Philips Electronics N.V. 2004. All rights reserved.

8.15 Internal voltage stabilizer

The band gap circuit internally generates a voltage of approximately 2.4 V, independent of the supply voltage and the temperature. A voltage regulator circuit, connected to this voltage, produces a constant voltage of 3.55 V which is used as an internal reference voltage.

8.16 Logic

The logic circuit detects the logic level at the logic ports VIF0, FM0 and FM1 as well as the presence of resistors (DC current to ground) at pins QSSO, SIF1 and SIF2 and controls the internal functions; see Table 4 to Table 6. In the event that all logic ports are open-circuit (high-ohmic or CMOS HIGH level) TV standard NTSC with a vision carrier frequency of 45.75 MHz, an FM sound carrier frequency of 4.5 MHz, de-emphasis with 75 µs time constant and auto mute on is selected.

Table 4: VIF frequency selection

QSSO	VIF0	VIF frequency (MHz)	Modulation
No resistor at pin	pin open-circuit	45.75	negative
No resistor at pin	pin connected to ground	38.9	negative
2.2 kΩ resistor to ground at pin	pin open-circuit	33.9	positive
2.2 kΩ resistor to ground at pin	pin connected to ground	38.9	positive

Table 5: FM carrier frequency selection and de-emphasis settings

FM0	FM1	FM carrier frequency (MHz)	De-emphasis (µs)
Pin open-circuit	pin open-circuit	4.5	75
Pin connected to ground	pin open-circuit	5.5	50
Pin open-circuit	pin connected to ground	6.0	50
Pin connected to ground	pin connected to ground	6.5 [1]	50

[1] For positive modulation choose 6.5 MHz.

Table 6: Auto mute on/off selection

SIF1 and SIF2	Auto mute
No DC path to ground	on
One or both pins connected to ground	off

© Koninklijke Philips Electronics N.V. 2004. All rights reserved.

9. Limiting values

Table 7: Limiting values

In accordance with the Absolute Maximum Rating System (IEC 60134).

Symbol	Parameter	Conditions		Min	Max	Unit
V_P	supply voltage			-	5.5	V
V_n	voltage on					
	all pins except AGND, DGND and TAGC			0	V_P	V
	pin TAGC			0	8.8	V
t_{sc}	short-circuit time to ground or V_P			-	10	s
T_{stg}	storage temperature			−25	+150	°C
T_{amb}	ambient temperature					
	TDA9882TS (SSOP24)			−20	+70	°C
	TDA9882HN (HVQFN32)			−20	+85	°C
V_{esd}	electrostatic discharge voltage	human body model	[1]	-	±4000	V
		machine model	[2]	-	±400	V

[1] Class 3A according to JESD22-A114-B.

[2] Class C according to EIA/JESD22-A115-A.

10. Thermal characteristics

Table 8: Thermal characteristics

Symbol	Parameter	Conditions	Typ	Unit
$R_{th(j-a)}$	thermal resistance from junction to ambient	in free air		
	TDA9882TS (SSOP24)		105	K/W
	TDA9882HN (HVQFN32)		40	K/W

11. Characteristics

Table 9: Characteristics

V_P = 5 V; T_{amb} = 25 °C; see Table 11 for input frequencies; B/G standard is used for the specification (f_{PC} = 38.9 MHz; f_{SC} = 33.4 MHz; PC/SC = 13 dB; f_{mod} = 400 Hz); input level $V_{i(VIF)}$ = 10 mV (RMS) (sync level for B/G; peak white level for L); IF input from 50 Ω via broadband transformer 1 : 1; video modulation DSB; residual carrier for B/G is 10 % and for L is 3 %; video signal in accordance with "CCIR line 17 and line 330"; measurements taken in test circuit of Figure 23; unless otherwise specified.

Symbol	Parameter	Conditions		Min	Typ	Max	Unit
Supply; pin V_P							
V_P	supply voltage		[1]	4.5	5.0	5.5	V
I_P	supply current			52	63	70	mA
P_{tot}	total power dissipation			-	305	385	mW
Power-on reset							
$V_{P(start)}$	supply voltage for start of reset	decreasing supply voltage		2.5	3.0	3.5	V

© Koninklijke Philips Electronics N.V. 2004. All rights reserved.

Table 9: Characteristics *...continued*

V_P = 5 V; T_{amb} = 25 °C; see Table 11 for input frequencies; B/G standard is used for the specification (f_{PC} = 38.9 MHz; f_{SC} = 33.4 MHz; PC/SC = 13 dB; f_{mod} = 400 Hz); input level $V_{i(VIF)}$ = 10 mV (RMS) (sync level for B/G; peak white level for L); IF input from 50 Ω via broadband transformer 1 : 1; video modulation DSB; residual carrier for B/G is 10 % and for L is 3 %; video signal in accordance with "CCIR line 17 and line 330"; measurements taken in test circuit of Figure 23; unless otherwise specified.

Symbol	Parameter	Conditions		Min	Typ	Max	Unit
$V_{P(stop)}$	supply voltage for end of reset	increasing supply voltage		-	-	4.4	V
τ_P	time constant (R × C) for network at pin V_P			1.2	-	-	µs
VIF amplifier; pins VIF1 and VIF2							
$V_{i(VIF)(rms)}$	VIF input voltage sensitivity (RMS value)	–1 dB video at output		-	60	100	µV
$V_{i(max)(rms)}$	maximum input voltage (RMS value)	1 dB video at output		150	190	-	mV
$V_{i(ovl)(rms)}$	overload input voltage (RMS value)		[2]	-	-	440	mV
$\Delta V_{IF(int)}$	internal IF amplitude difference between picture and sound carrier	within AGC range; Δf = 5.5 MHz		-	0.9	-	dB
$G_{VIF(cr)}$	VIF gain control range	see Figure 6		60	66	-	dB
$B_{VIF(-3dB)(ll)}$	lower limit –3 dB VIF bandwidth			-	15	-	MHz
$B_{VIF(-3dB)(ul)}$	upper limit –3 dB VIF bandwidth			-	80	-	MHz
$R_{i(dif)}$	differential input resistance		[3]	-	2	-	kΩ
$C_{i(dif)}$	differential input capacitance		[3]	-	3	-	pF
V_I	DC input voltage			-	1.93	-	V
FPLL and true synchronous video demodulator [4]							
$f_{VCO(max)}$	maximum oscillator frequency for carrier regeneration	$f = 2f_{PC}$		120	140	-	MHz
f_{VIF}	vision carrier operating frequencies	see Table 4		-	33.9	-	MHz
				-	38.9	-	MHz
				-	45.75	-	MHz
Δf_{VIF}	VIF frequency window of digital acquisition help	related to f_{VIF}; see Figure 9		-	±2.3	-	MHz
t_{acq}	acquisition time	BL = 70 kHz	[5]	-	-	30	ms
$V_{i(lock)(rms)}$	input voltage sensitivity for PLL to be locked (RMS value)	measured on pins VIF1 and VIF2; maximum IF gain		-	50	100	µV
$T_{cy(DAH)}$	cycle time of digital acquisition help			-	64	-	µs
$K_{O(VIF)}$	VIF VCO steepness	definition: $\Delta f_{VIF}/\Delta V_{VPLL}$		-	20	-	MHz/V

© Koninklijke Philips Electronics N.V. 2004. All rights reserved.

Table 9: Characteristics *...continued*

V_P = 5 V; T_{amb} = 25 °C; see Table 11 for input frequencies; B/G standard is used for the specification (f_{PC} = 38.9 MHz; f_{SC} = 33.4 MHz; PC/SC = 13 dB; f_{mod} = 400 Hz); input level $V_{i(VIF)}$ = 10 mV (RMS) (sync level for B/G; peak white level for L); IF input from 50 Ω via broadband transformer 1 : 1; video modulation DSB; residual carrier for B/G is 10 % and for L is 3 %; video signal in accordance with "CCIR line 17 and line 330"; measurements taken in test circuit of Figure 23; unless otherwise specified.

Symbol	Parameter	Conditions		Min	Typ	Max	Unit
$K_{D(VIF)}$	VIF phase detector steepness	definition: $\Delta I_{VPLL}/\Delta\varphi_{VIF}$		-	23	-	µA/rad
Video output 2 V; pin CVBS; sound carrier on							
$V_{o(p-p)}$	video output voltage (peak-to-peak value)	see Figure 4		1.7	2.0	2.3	V
ΔV_o	video output voltage difference	difference between L and B/G standard		–12	-	+12	%
V/S	ratio between video (black-to-white) and sync level			1.90	2.33	3.00	
V_{sync}	sync voltage level			1.0	1.2	1.4	V
$V_{clip(u)}$	upper video clipping voltage level			V_P – 1.1	V_P – 1	-	V
$V_{clip(l)}$	lower video clipping voltage level			-	0.7	0.9	V
R_o	output resistance		[3]	-	-	30	Ω
$I_{bias(int)}$	internal DC bias current for emitter-follower			1.5	2.0	-	mA
$I_{o(sink)(max)}$	maximum AC and DC output sink current			1	-	-	mA
$I_{o(source)(max)}$	maximum AC and DC output source current			3.9	-	-	mA
$\Delta V_{o(CVBS)}$	deviation of CVBS output voltage	50 dB gain control		-	-	0.5	dB
		30 dB gain control		-	-	0.1	dB
$\Delta V_{o(bl)}$	black level tilt	negative modulation		-	-	2	%
$\Delta V_{o(bl)(v)}$	vertical black level tilt for worst case in L standard	vision carrier modulated by test line (VITS) only		-	-	3	%
G_{dif}	differential gain	*"CCIR 330"*	[6]				
		B/G standard		-	-	5	%
		L standard		-	-	7	%
φ_{dif}	differential phase	*"CCIR 330"*		-	2	4	deg
$S/N_{W(video)}$	weighted signal-to-noise ratio	weighted in accordance with *"CCIR 567"*; see Figure 10	[7]	55	-	-	dB
$S/N_{UW(video)}$	unweighted signal-to-noise ratio		[7]	47	-	-	dB
$\alpha_{IM(blue)}$	intermodulation attenuation at 'blue'	see Figure 11	[8]				
		f = 1.1 MHz		58	64	-	dB
		f = 3.3 MHz		58	64	-	dB

© Koninklijke Philips Electronics N.V. 2004. All rights reserved.

Table 9: Characteristics *...continued*

V_P = 5 V; T_{amb} = 25 °C; see Table 11 for input frequencies; B/G standard is used for the specification (f_{PC} = 38.9 MHz; f_{SC} = 33.4 MHz; PC/SC = 13 dB; f_{mod} = 400 Hz); input level $V_{i(VIF)}$ = 10 mV (RMS) (sync level for B/G; peak white level for L); IF input from 50 Ω via broadband transformer 1 : 1; video modulation DSB; residual carrier for B/G is 10 % and for L is 3 %; video signal in accordance with "CCIR line 17 and line 330"; measurements taken in test circuit of Figure 23; unless otherwise specified.

Symbol	Parameter	Conditions		Min	Typ	Max	Unit
$\alpha_{IM(yellow)}$	intermodulation attenuation at 'yellow'	see Figure 11	[8]				
		f = 1.1 MHz		60	66	-	dB
		f = 3.3 MHz		59	65	-	dB
$\Delta V_{r(PC)(rms)}$	residual picture carrier (RMS value)	fundamental wave and harmonics		-	2	5	mV
$\Delta f_{unw(p-p)}$	robustness for unwanted frequency deviation of picture carrier (peak-to-peak value)	3 % residual carrier; 50 % serration pulses; L standard	[3]	-	-	12	kHz
$\Delta\varphi$	robustness for modulator imbalance	0 % residual carrier; 50 % serration pulses; L standard	[3]	-	-	3	%
α_H	suppression of video signal harmonics	C_L < 20 pF; R_L > 1 kΩ; AC load	[9]	35	40	-	dB
α_{spur}	suppression of spurious elements		[10]	40	-	-	dB
$PSRR_{CVBS}$	power supply ripple rejection at pin CVBS	f_{ripple} = 70 Hz; see Figure 5	[11]	20	25	-	dB
M/N standard inclusive Korea; see Figure 12							
$B_{v(-3dB)(trap)}$	–3 dB video bandwidth including sound carrier trap	f_{trap} = 4.5 MHz	[12]	3.95	4.05	-	MHz
α_{SC1}	attenuation at first sound carrier	f = 4.5 MHz		26	36	-	dB
$\alpha_{SC1(60kHz)}$	attenuation at first sound carrier $f_{SC1} \pm 60$ kHz	f = 4.5 MHz		20	27	-	dB
α_{SC2}	attenuation at second sound carrier	f = 4.724 MHz		20	27	-	dB
$\alpha_{SC2(60kHz)}$	attenuation at second sound carrier $f_{SC2} \pm 60$ kHz	f = 4.724 MHz		14	21	-	dB
$t_{d(g)(cc)}$	group delay at color carrier frequency	f = 3.58 MHz; see Figure 13		110	180	250	ns
B/G standard; see Figure 14							
$B_{v(-3dB)(trap)}$	–3 dB video bandwidth including sound carrier trap	f_{trap} = 5.5 MHz	[12]	4.90	5.00	-	MHz
α_{SC1}	attenuation at first sound carrier	f = 5.5 MHz		26	36	-	dB
$\alpha_{SC1(60kHz)}$	attenuation at first sound carrier $f_{SC1} \pm 60$ kHz	f = 5.5 MHz		20	30	-	dB

© Koninklijke Philips Electronics N.V. 2004. All rights reserved.

Table 9: Characteristics *...continued*

V_P = 5 V; T_{amb} = 25 °C; see Table 11 for input frequencies; B/G standard is used for the specification (f_{PC} = 38.9 MHz; f_{SC} = 33.4 MHz; PC/SC = 13 dB; f_{mod} = 400 Hz); input level $V_{i(VIF)}$ = 10 mV (RMS) (sync level for B/G; peak white level for L); IF input from 50 Ω via broadband transformer 1 : 1; video modulation DSB; residual carrier for B/G is 10 % and for L is 3 %; video signal in accordance with "CCIR line 17 and line 330"; measurements taken in test circuit of Figure 23; unless otherwise specified.

Symbol	Parameter	Conditions		Min	Typ	Max	Unit
α_{SC2}	attenuation at second sound carrier	f = 5.742 MHz		20	27	-	dB
$\alpha_{SC2(60kHz)}$	attenuation at second sound carrier $f_{SC2} \pm 60$ kHz	f = 5.742 MHz		14	21	-	dB
$t_{d(g)(cc)}$	group delay at color carrier frequency	f = 4.43 MHz; see Figure 15		110	180	250	ns
I standard; see Figure 16							
$B_{v(-3dB)(trap)}$	–3 dB video bandwidth including sound carrier trap	f_{trap} = 6.0 MHz	[12]	5.40	5.50	-	MHz
α_{SC1}	attenuation at first sound carrier	f = 6.0 MHz		26	32	-	dB
$\alpha_{SC1(60kHz)}$	attenuation at first sound carrier $f_{SC1} \pm 60$ kHz	f = 6.0 MHz		20	26	-	dB
α_{SC2}	attenuation at second sound carrier	f = 6.55 MHz		12	18	-	dB
$\alpha_{SC2(60kHz)}$	attenuation at second sound carrier $f_{SC2} \pm 60$ kHz	f = 6.55 MHz		10	15	-	dB
$t_{d(g)(cc)}$	group delay at color carrier frequency	f = 4.43 MHz		-	90	160	ns
D/K, L and L-accent standard; see Figure 17							
$B_{v(-3dB)(trap)}$	–3 dB video bandwidth including sound carrier trap	f_{trap} = 6.5 MHz	[12]	5.50	5.95	-	MHz
α_{SC1}	attenuation at first sound carrier	f = 6.5 MHz		26	32	-	dB
$\alpha_{SC1(60kHz)}$	attenuation at first sound carrier $f_{SC1} \pm 60$ kHz	f = 6.5 MHz		20	26	-	dB
α_{SC2}	attenuation at second sound carrier	f = 6.742 MHz		18	24	-	dB
$\alpha_{SC2(60kHz)}$	attenuation at second sound carrier $f_{SC2} \pm 60$ kHz	f = 6.742 MHz		13	18	-	dB
$t_{d(g)(cc)}$	group delay at color carrier frequency	f = 4.28 MHz		-	60	130	ns
VIF AGC							
$t_{resp(inc)}$	AGC response time to an increasing VIF step	negative modulation; 20 dB	[13]	-	4	-	ms
		positive modulation; 20 dB	[13]	-	2.6	-	ms

© Koninklijke Philips Electronics N.V. 2004. All rights reserved.

Table 9: Characteristics *...continued*

V_P = 5 V; T_{amb} = 25 °C; see Table 11 for input frequencies; B/G standard is used for the specification (f_{PC} = 38.9 MHz; f_{SC} = 33.4 MHz; PC/SC = 13 dB; f_{mod} = 400 Hz); input level $V_{i(VIF)}$ = 10 mV (RMS) (sync level for B/G; peak white level for L); IF input from 50 Ω via broadband transformer 1 : 1; video modulation DSB; residual carrier for B/G is 10 % and for L is 3 %; video signal in accordance with "CCIR line 17 and line 330"; measurements taken in test circuit of Figure 23; unless otherwise specified.

Symbol	Parameter	Conditions		Min	Typ	Max	Unit
$t_{resp(dec)}$	AGC response time to a decreasing VIF step	negative modulation; 20 dB	[13]	-	3	-	ms
		positive modulation; 20 dB	[13]	-	890	-	ms
		L standard; fast mode		-	2.6	-	ms/dB
		L standard; normal mode	[13]	-	143	-	ms/dB
CR_{stps}	control steepness	definition: $\Delta G_{VIF}/\Delta V_{VAGC}$; V_{VAGC} = 2 V to 3 V		-	–80	-	dB/V
Pin CAGC							
$I_{ch(max)}$	maximum charge current	L standard		-	100	-	µA
$I_{ch(add)}$	additional charge current	L standard: in the event of missing VITS pulses and no white video content		-	100	-	nA
I_{dch}	discharge current	L standard; normal mode		-	35	-	nA
		L standard; fast mode		-	1.8	-	µA
Pin VAGC							
V_{VAGC}	gain control voltage range	see Figure 6		0.8	-	3.5	V
$I_{o(sink)(max)}$	maximum output sink current			-	-	10	µA
$I_{o(source)(max)}$	maximum output source current			-	-	10	µA
Tuner AGC; pin TAGC; see Figure 6 to Figure 8							
$V_{i(VIF)(start1)(rms)}$	VIF input signal voltage for minimum starting point of tuner takeover at pins VIF1 and VIF2 (RMS value)	I_{TAGC} = 120 µA; R_{TOP} = 22 kΩ		-	2	5	mV
$V_{i(VIF)(start2)(rms)}$	VIF input signal voltage for maximum starting point of tuner takeover at pins VIF1 and VIF2 (RMS value)	I_{TAGC} = 120 µA; R_{TOP} = 0 Ω		45	90	-	mV
QV_{TOP}	tuner takeover point accuracy	I_{TAGC} = 120 µA; R_{TOP} = 10 kΩ		7	17	43	mV
$\Delta QV_{TOP}/\Delta T$	takeover point variation with temperature	I_{TAGC} = 120 µA		-	0.03	0.07	dB/K
V_o	permissible output voltage	from external source		-	-	8.8	V
V_{sat}	saturation voltage	I_{TAGC} = 450 µA		-	-	0.5	V

© Koninklijke Philips Electronics N.V. 2004. All rights reserved.

Table 9: Characteristics *...continued*

V_P = 5 V; T_{amb} = 25 °C; see Table 11 for input frequencies; B/G standard is used for the specification (f_{PC} = 38.9 MHz; f_{SC} = 33.4 MHz; PC/SC = 13 dB; f_{mod} = 400 Hz); input level $V_{i(VIF)}$ = 10 mV (RMS) (sync level for B/G; peak white level for L); IF input from 50 Ω via broadband transformer 1 : 1; video modulation DSB; residual carrier for B/G is 10 % and for L is 3 %; video signal in accordance with "CCIR line 17 and line 330"; measurements taken in test circuit of Figure 23; unless otherwise specified.

Symbol	Parameter	Conditions		Min	Typ	Max	Unit
I_{sink}	sink current	no tuner gain reduction; V_{TAGC} = 8.8 V		-	-	0.75	µA
		maximum tuner gain reduction; V_{TAGC} = 1 V		450	600	750	µA
ΔG_{IF}	IF slip by automatic gain control	tuner gain current from 20 % to 80 %		3	5	8	dB
AFC circuit; pin AFC; see Figure 9 [14] [15]							
AFC_{stps}	AFC control steepness	definition: $\Delta I_{AFC}/\Delta f_{VIF}$		0.85	1.05	1.25	µA/kHz
$Qf_{VIF(a)}$	analog accuracy of AFC circuit	I_{AFC} = 0 A; f_{REF} = 4 MHz		–20	-	+20	kHz
$V_{sat(ul)}$	upper limit saturation voltage			V_P – 0.6	V_P – 0.3	-	V
$V_{sat(ll)}$	lower limit saturation voltage			-	0.3	0.6	V
$I_{o(source)}$	output source current			160	200	240	µA
$I_{o(sink)}$	output sink current			160	200	240	µA
SIF amplifier; pins SIF1 and SIF2							
$V_{i(SIF)(rms)}$	SIF input voltage sensitivity (RMS value)	FM mode; –3 dB at intercarrier output pin QSSO		-	30	70	µV
		AM mode; –3 dB at AF output pin AUD		-	70	100	µV
$V_{i(max)(rms)}$	maximum input voltage (RMS value)	FM mode; 1 dB at intercarrier output pin QSSO		50	70	-	mV
		AM mode; 1 dB at AF output pin AUD		80	140	-	mV
$V_{i(ovl)(rms)}$	overload input voltage (RMS value)		[2]	-	-	320	mV
$G_{SIF(cr)}$	SIF gain control range	see Figure 8		60	66	-	dB
$B_{SIF(-3dB)(ll)}$	lower limit –3 dB SIF bandwidth			-	15	-	MHz
$B_{SIF(-3dB)(ul)}$	upper limit –3 dB SIF bandwidth			-	80	-	MHz
$R_{i(dif)}$	differential input resistance		[3]	-	2	-	kΩ
$C_{i(dif)}$	differential input capacitance		[3]	-	3	-	pF
V_I	DC input voltage			-	1.93	-	V

© Koninklijke Philips Electronics N.V. 2004. All rights reserved.

Table 9: Characteristics *...continued*

V_P = 5 V; T_{amb} = 25 °C; see Table 11 for input frequencies; B/G standard is used for the specification (f_{PC} = 38.9 MHz; f_{SC} = 33.4 MHz; PC/SC = 13 dB; f_{mod} = 400 Hz); input level $V_{i(VIF)}$ = 10 mV (RMS) (sync level for B/G; peak white level for L); IF input from 50 Ω via broadband transformer 1 : 1; video modulation DSB; residual carrier for B/G is 10 % and for L is 3 %; video signal in accordance with "CCIR line 17 and line 330"; measurements taken in test circuit of Figure 23; unless otherwise specified.

Symbol	Parameter	Conditions		Min	Typ	Max	Unit
SIF AGC detector							
t_{resp}	AGC response time to an increasing or decreasing SIF step of 20 dB	FM or AM fast step					
		increasing		-	8	-	ms
		decreasing		-	25	-	ms
		AM slow step					
		increasing		-	80	-	ms
		decreasing		-	250	-	ms
Single reference QSS intercarrier mixer; pin QSSO							
$V_{o(intc)(rms)}$	IF intercarrier output level (RMS value)	SC_1; SC_2 off		90	140	210	mV
$B_{intc(-3dB)(ul)}$	upper limit −3 dB intercarrier bandwidth			12	15	-	MHz
$\Delta V_{r(SC)(rms)}$	residual sound carrier (RMS value)	fundamental wave and harmonics		-	2	5	mV
$\Delta V_{r(PC)(rms)}$	residual picture carrier (RMS value)	fundamental wave and harmonics		-	2	5	mV
R_o	output resistance		[3]	-	-	30	Ω
V_O	DC output voltage			-	2	-	V
$I_{bias(int)}$	internal DC bias current for emitter follower			0.9	1.3	-	mA
$I_{o(sink)(max)}$	maximum AC output sink current			0.6	0.8	-	mA
$I_{o(source)(max)}$	maximum AC output source current			0.6	0.8	-	mA
$I_{o(source)}$	DC output source current	modulation is set to positive	[16]	0.75	0.93	1.20	mA
FM PLL demodulator [15] and [17] to [21]							
Sound intercarrier output; pin QSSO							
$V_{FM(rms)}$	IF intercarrier level for gain controlled operation of FM PLL (RMS value)	corresponding PC/SC ratio at input pins VIF1 and VIF2 is 7 dB to 47 dB		3.2	-	320	mV
$V_{FM(lock)(rms)}$	IF intercarrier level for lock-in of PLL (RMS value)			-	-	2	mV
$V_{FM(det)(rms)}$	IF intercarrier level for FM carrier detect (RMS value)			-	-	2.3	mV

© Koninklijke Philips Electronics N.V. 2004. All rights reserved.

Table 9: Characteristics *...continued*

V_P = 5 V; T_{amb} = 25 °C; see Table 11 for input frequencies; B/G standard is used for the specification (f_{PC} = 38.9 MHz; f_{SC} = 33.4 MHz; PC/SC = 13 dB; f_{mod} = 400 Hz); input level $V_{i(VIF)}$ = 10 mV (RMS) (sync level for B/G; peak white level for L); IF input from 50 Ω via broadband transformer 1 : 1; video modulation DSB; residual carrier for B/G is 10 % and for L is 3 %; video signal in accordance with "CCIR line 17 and line 330"; measurements taken in test circuit of Figure 23; unless otherwise specified.

Symbol	Parameter	Conditions		Min	Typ	Max	Unit
f_{FM}	sound intercarrier operating FM frequencies	see Table 5		-	4.5	-	MHz
				-	5.5	-	MHz
				-	6.0	-	MHz
				-	6.5	-	MHz
Audio output; pin AUD							
$V_{o(AF)(rms)}$	AF output voltage (RMS value)	25 kHz FM deviation; 75 µs de-emphasis		400	500	600	mV
		27 kHz FM deviation; 50 µs de-emphasis		430	540	650	mV
$V_{o(AF)(cl)(rms)}$	AF output clipping level (RMS value)	THD < 1.5 %		1.3	1.4	-	V
$\Delta V_{o(AF)}/\Delta T$	AF output voltage variation with temperature			-	3×10^{-3}	7×10^{-3}	dB/K
THD	total harmonic distortion			-	0.15	0.50	%
Δf_{AF}	frequency deviation	THD < 1.5 %	[18]	-	-	±55	kHz
$B_{AF(-3dB)}$	−3 dB AF bandwidth	without de-emphasis; measured with FM PLL filter of Figure 22		80	100	-	kHz
$S/N_{W(AF)}$	weighted signal-to-noise ratio of audio signal	FM PLL only; 27 kHz FM deviation; 50 µs de-emphasis		52	56	-	dB
		black picture; see Figure 18		50	56	-	dB
$\Delta V_{r(SC)(rms)}$	residual sound carrier (RMS value)	fundamental wave and harmonics; without de-emphasis		-	-	2	mV
$\alpha_{AM(sup)}$	AM suppression of FM demodulator	referenced to 27 kHz FM deviation; 50 µs de-emphasis; AM: f = 1 kHz; m = 54 %		40	46	-	dB
$PSRR_{FM}$	power supply ripple rejection	f_{ripple} = 70 Hz; see Figure 5		14	20	-	dB
FM PLL filter; pin FMPLL							
V_{loop}	DC loop voltage			1.5	-	3.3	V
$I_{o(source)(PD)(max)}$	maximum phase detector output source current			-	60	-	µA
$I_{o(sink)(PD)(max)}$	maximum phase detector output sink current			-	60	-	µA

© Koninklijke Philips Electronics N.V. 2004. All rights reserved.

Table 9: Characteristics *...continued*

V_P = 5 V; T_{amb} = 25 °C; see Table 11 for input frequencies; B/G standard is used for the specification (f_{PC} = 38.9 MHz; f_{SC} = 33.4 MHz; PC/SC = 13 dB; f_{mod} = 400 Hz); input level $V_{i(VIF)}$ = 10 mV (RMS) (sync level for B/G; peak white level for L); IF input from 50 Ω via broadband transformer 1 : 1; video modulation DSB; residual carrier for B/G is 10 % and for L is 3 %; video signal in accordance with "CCIR line 17 and line 330"; measurements taken in test circuit of Figure 23; unless otherwise specified.

Symbol	Parameter	Conditions		Min	Typ	Max	Unit
$I_{o(source)(DAH)}$	output source current of digital acquisition help			-	55	-	µA
$I_{o(sink)(DAH)}$	output sink current of digital acquisition help			-	55	-	µA
$t_{W(DAH)}$	pulse width of digital acquisition help current			-	16	-	µs
$T_{cy(DAH)}$	cycle time of digital acquisition help			-	64	-	µs
$K_{O(FM)}$	VCO steepness	definition: $\Delta f_{FM}/\Delta V_{FMPLL}$		-	3.3	-	MHz/V
$K_{D(FM)}$	phase detector steepness	definition: $\Delta I_{FMPLL}/\Delta\varphi_{FM}$		-	4	-	µA/rad
Audio amplifier							
De-emphasis network; pin DEEM							
R_o	output resistance	50 µs de-emphasis; see Table 5		4.4	5.0	5.6	kΩ
		75 µs de-emphasis; see Table 5		6.6	7.5	8.4	kΩ
$V_{AF(rms)}$	audio signal (RMS value)	f_{AF} = 400 Hz; V_{AUD} = 500 mV		-	170	-	mV
V_O	DC output voltage			-	2.37	-	V
AF decoupling; pin AFD							
V_{dec}	DC decoupling voltage	dependent on f_{FM} intercarrier frequency		1.5	-	3.3	V
I_L	leakage current	$\Delta V_{O(AUD)}$ < ±50 mV		-	-	±25	nA
$I_{ch(max)}$	maximum charge current			1.15	1.50	1.85	µA
$I_{dch(max)}$	maximum discharge current			1.15	1.50	1.85	µA
Audio output; pin AUD							
R_o	output resistance		[3]	-	-	300	Ω
V_O	DC output voltage			-	2.37	-	V
R_L	load resistance	AC-coupled		10	-	-	kΩ
$R_{L(DC)}$	DC load resistance			100	-	-	kΩ
C_L	load capacitance			-	-	1.5	nF
$B_{AF(-3dB)(ul)}$	upper limit –3 dB AF bandwidth of audio amplifier			150	-	-	kHz
$B_{AF(-3dB)(ll)}$	lower limit –3 dB AF bandwidth of audio amplifier		[19]	-	-	20	Hz

© Koninklijke Philips Electronics N.V. 2004. All rights reserved.

Table 9: Characteristics *...continued*

V_P = 5 V; T_{amb} = 25 °C; see Table 11 for input frequencies; B/G standard is used for the specification (f_{PC} = 38.9 MHz; f_{SC} = 33.4 MHz; PC/SC = 13 dB; f_{mod} = 400 Hz); input level $V_{i(VIF)}$ = 10 mV (RMS) (sync level for B/G; peak white level for L); IF input from 50 Ω via broadband transformer 1 : 1; video modulation DSB; residual carrier for B/G is 10 % and for L is 3 %; video signal in accordance with "CCIR line 17 and line 330"; measurements taken in test circuit of Figure 23; unless otherwise specified.

Symbol	Parameter	Conditions	Min	Typ	Max	Unit
α_{mute}	mute attenuation of AF signal	auto mute on; see Table 6	70	75	-	dB
ΔV_{jump}	DC jump voltage for switching AF output to mute state or vice versa	activated by digital acquisition help; auto mute on; see Table 6	-	±50	±150	mV
FM operation [20] [22]						
Single reference QSS AF performance [23] [24]						
$S/N_{W(SC1)}$	weighted signal-to-noise ratio for SC_1	VIF input sound carrier suppression: PC/SC_1 ratio at pins VIF1 and VIF2 > 40 dB				
		black picture	51	-	-	dB
		white picture	48	-	-	dB
		6 kHz sine wave (black-to-white modulation)	42	-	-	dB
		250 kHz square wave (black-to-white modulation)	40	-	-	dB
		sound carrier subharmonics; f = 2.75 MHz ± 3 kHz	43	-	-	dB
		sound carrier subharmonics; f = 2.87 MHz ± 3 kHz	44	-	-	dB
$S/N_{W(SC2)}$	weighted signal-to-noise ratio for SC_2	VIF input sound carrier suppression: PC/SC_2 ratio at pins VIF1 and VIF2 > 40 dB				
		black picture	46	-	-	dB
		white picture	45	-	-	dB
		6 kHz sine wave (black-to-white modulation)	41	-	-	dB
		250 kHz square wave (black-to-white modulation)	29	-	-	dB
		sound carrier subharmonics; f = 2.75 MHz ± 3 kHz	42	-	-	dB
		sound carrier subharmonics; f = 2.87 MHz ± 3 kHz	43	-	-	dB

© Koninklijke Philips Electronics N.V. 2004. All rights reserved.

Table 9: Characteristics *...continued*

V_P = 5 V; T_{amb} = 25 °C; see Table 11 for input frequencies; B/G standard is used for the specification (f_{PC} = 38.9 MHz; f_{SC} = 33.4 MHz; PC/SC = 13 dB; f_{mod} = 400 Hz); input level $V_{i(VIF)}$ = 10 mV (RMS) (sync level for B/G; peak white level for L); IF input from 50 Ω via broadband transformer 1 : 1; video modulation DSB; residual carrier for B/G is 10 % and for L is 3 %; video signal in accordance with "CCIR line 17 and line 330"; measurements taken in test circuit of Figure 23; unless otherwise specified.

Symbol	Parameter	Conditions		Min	Typ	Max	Unit
AM operation							
L standard; pin AUD; see Figure 19 and Figure 20 [25]							
$V_{o(AF)(rms)}$	AF output voltage (RMS value)	54 % modulation		400	500	600	mV
THD	total harmonic distortion	54 % modulation		-	0.5	1.0	%
$B_{AF(-3dB)}$	−3 dB AF bandwidth			100	125	-	kHz
$S/N_{W(AF)}$	weighted signal-to-noise ratio of audio signal	in accordance with *"CCIR 468"*		45	50	-	dB
V_O	DC potential voltage			-	2.37	-	V
$PSRR_{AM}$	power supply ripple rejection	see Figure 5		20	26	-	dB
Reference frequency input; pin REF							
V_I	DC input voltage			2.3	2.6	2.9	V
R_i	input resistance		[3]	-	5	-	kΩ
R_{xtal}	resonance resistance of crystal	operation as crystal oscillator		-	-	200	Ω
C_x	pull-up or pull-down capacitance		[26]	-	-	-	pF
f_{ref}	reference signal frequency		[27]	-	4	-	MHz
Δf_{ref}	tolerance of reference signal frequency		[15]	-	-	±0.1	%
$V_{ref(rms)}$	reference signal voltage (RMS value)	operation as input terminal		80	-	400	mV
$R_{o(ref)}$	output resistance of reference signal source			-	-	4.7	kΩ
C_K	decoupling capacitance to external reference signal source	operation as input terminal		22	100	-	pF
Logic; pins FM1, FM0 and VIF0; see Table 4 to Table 6							
V_i	input voltage	for LOW level		0	-	0.8	V
		for HIGH level		2.5	-	V_P	V
$V_{i(open)}$	free-running voltage	pin open-circuit; I_i < 0.1 µA		-	V_P	-	V
R_i	internal pull-up resistance			37.5	-	62.5	kΩ

[1] Values of video and sound parameters can be decreased at V_P = 4.5 V.

[2] Level headroom for input level jumps during gain control setting.

[3] This parameter is not tested during the production and is only given as application information for designing the receiver circuit.

© Koninklijke Philips Electronics N.V. 2004. All rights reserved.

[4] Loop bandwidth BL = 70 kHz (damping factor d = 1.9; calculated with sync level within gain control range). Calculation of the VIF PLL filter can be done by use of the following formula:

$$BL_{-3dB} = \frac{1}{2\pi} K_O K_D R \text{, valid for } d \geq 1.2$$

$$d = \frac{1}{2} R \sqrt{K_O K_D C},$$

where:

K_O is the VCO steepness $\left(\frac{\text{rad}}{V}\right)$ or $\left(2\pi\frac{\text{Hz}}{V}\right)$; K_D is the phase detector steepness $\left(\frac{\mu A}{\text{rad}}\right)$;

R is the loop resistor; C is the loop capacitor; BL_{-3dB} is the loop bandwidth for –3 dB; d is the damping factor.

[5] $V_{i(VIF)}$ = 10 mV (RMS); Δf = 1 MHz (VCO frequency offset related to picture carrier frequency); white picture video modulation.

[6] Condition: luminance range (5 steps) from 0 % to 100 %.

[7] $S/N_{W(video)}$ is the ratio of black-to-white amplitude to the black level noise voltage (RMS value measured on pin CVBS). B = 5 MHz (B/G, I and D/K standard). Noise analyzer setting: 200 kHz high-pass and SC-trap switched on.

[8] The intermodulation figures are defined for:

a) f = 1.1 MHz (referenced to black and white signal) as $\alpha_{IM} = 20\ log\left(\frac{V_0 \text{ at } 4.4\text{ MHz}}{V_0 \text{ at } 1.1\text{ MHz}}\right) + 3.6\text{ dB}$

b) f = 3.3 MHz (referenced to color carrier) as $\alpha_{IM} = 20\ log\left(\frac{V_0 \text{ at } 4.4\text{ MHz}}{V_0 \text{ at } 3.3\text{ MHz}}\right)$

[9] Modulation Vestigial Side-Band (VSB); sound carrier off; f_{video} > 0.5 MHz. Measurements taken with SAW filter M1963M (sound shelf: 20 dB); loop bandwidth BL = 70 kHz.

[10] Sound carrier on; f_{video} = 10 kHz to 10 MHz. Measurements taken with SAW filter M1963M (sound shelf: 20 dB); loop bandwidth BL = 70 kHz.

[11] Conditions: video signal, grey level and negative modulation.

[12] AC load; C_L < 20 pF and R_L > 1 kΩ. The sound carrier frequencies (depending on TV standard) are attenuated by the integrated sound carrier traps (see Figure 12 to Figure 17; |H(s)| is the absolute value of transfer function).

[13] The response time is valid for a VIF input level range from 200 μV to 70 mV.

[14] To match the AFC output signal to different tuning systems a current source output is provided. The test circuit is given in Figure 9. The AFC slope (voltage per frequency) can be changed by resistors R1 and R2.

[15] The tolerance of the reference frequency determines the accuracy of the VIF AFC, FM demodulator center frequency and maximum FM deviation.

[16] For negative modulation no DC load at pin QSSO is allowed. Positive modulation mode will be activated by the application of a 2.2 kΩ resistor between pin QSSO and ground.

[17] SIF input level is 10 mV (RMS); VIF input level is 10 mV (RMS) unmodulated.

[18] Measured with an FM deviation of 25 kHz and the typical AF output voltage of 500 mV (RMS). For handling a frequency deviation of more than 55 kHz, the AF output signal has to be reduced in order to avoid clipping (THD < 1.5 %) by means of a resistor R_x with external application at pin AFD (see Figure 22 and Figure 23).

[19] The lower limit of the audio bandwidth depends on the value of the capacitor at pin AFD. A value of C_{AF} = 470 nF leads to $f_{AF(-3dB)} \approx$ 20 Hz and C_{AF} = 220 nF leads to $f_{AF(-3dB)} \approx$ 40 Hz.

[20] For all S/N measurements the used VIF modulator has to meet the following specifications:

a) Incidental phase modulation for black-to-white jump less than 0.5 degrees.

b) QSS AF performance, measured with the television demodulator AMF2 (audio output, weighted S/N ratio) better than 60 dB (at deviation 27 kHz) for 6 kHz sine wave black-to-white video modulation.

c) Picture-to-sound carrier ratio PC/SC_1 = 13 dB (transmitter).

© Koninklijke Philips Electronics N.V. 2004. All rights reserved.

[21] Calculation of the loop filter can be done approximately by use of the following formulae:

$$f_o = \frac{1}{2\pi}\sqrt{\frac{K_O K_D}{C_P}}$$

$$\vartheta = \frac{1}{2R\sqrt{K_O K_D C_P}}$$

$$BL_{-3dB} = f_o(1.55 - \vartheta^2)$$

The formulae are only valid under the following conditions:
$\vartheta \leq 1$ and $C_S > 5C_P$

where: K_O is the VCO steepness $\left(\frac{rad}{V}\right)$ or $\left(2\pi\frac{Hz}{V}\right)$; K_D is the phase detector steepness $\left(\frac{\mu A}{rad}\right)$; R is the loop resistor; C_S is the series capacitor; C_P is the parallel capacitor; f_o is the natural frequency of PLL; BL_{-3dB} is the loop bandwidth for –3 dB; ϑ is the damping factor. For examples, see Table 10.

[22] The PC/SC ratio is calculated as the addition of TV transmitter PC/SC_1 ratio and SAW filter PC/SC_1 ratio. This PC/SC ratio is necessary to achieve the S/N_W values as noted. A different PC/SC ratio will change these values.

[23] The QSS signal output on pin QSSO is analyzed by a test demodulator TDA9820. The S/N ratio of this device is more than 60 dB, related to a deviation of ± 27 kHz, in accordance with *"CCIR 468"*.

[24] Measurements taken with SAW filter G3962 for vision IF (suppressed sound carrier) and K9350 for sound IF (suppressed picture carrier). Input level $V_{i(SIF)}$ = 10 mV (RMS), 27 kHz (54 % FM deviation).

[25] Measurements taken with SAW filter K9453 (Siemens) for AM sound IF (suppressed picture carrier).

[26] The value of C_x determines the accuracy of the resonance frequency of the crystal. It depends on the used type of crystal.

[27] Pin REF is able to operate as a 1-pin crystal oscillator input as well as an external reference signal input, e.g. from the tuning system.

Table 10: Examples to the FM PLL filter

BL_{-3dB} (kHz)	C_S (nF)	C_P (pF)	R (kΩ)	ϑ
100	10	390	5.6	0.5
160	10	150	9.1	0.5

Table 11: Input frequencies and carrier ratios

Description	Symbol	B/G standard	M/N standard	L standard	L-accent standard	Unit
VIF carrier	f_{PC}	38.9	45.75	38.9	33.9	MHz
SIF carrier	f_{SC1}	33.4	41.25	32.4	40.4	MHz
	f_{SC2}	33.158	-	-	-	MHz
Picture-to-sound carrier ratio	SC_1	13	7	10	10	dB
	SC_2	20	-	-	-	dB

© Koninklijke Philips Electronics N.V. 2004. All rights reserved.

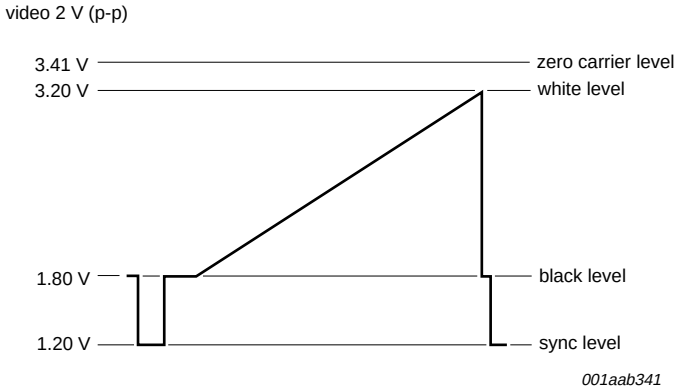

Fig 4. Typical video signal levels on output pin CVBS (sound carrier off).

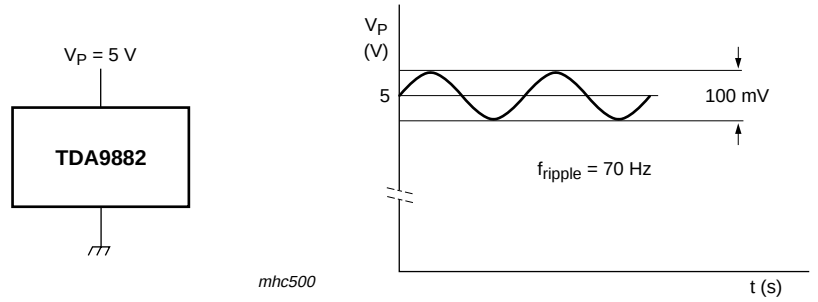

Fig 5. Ripple rejection condition.

© Koninklijke Philips Electronics N.V. 2004. All rights reserved.

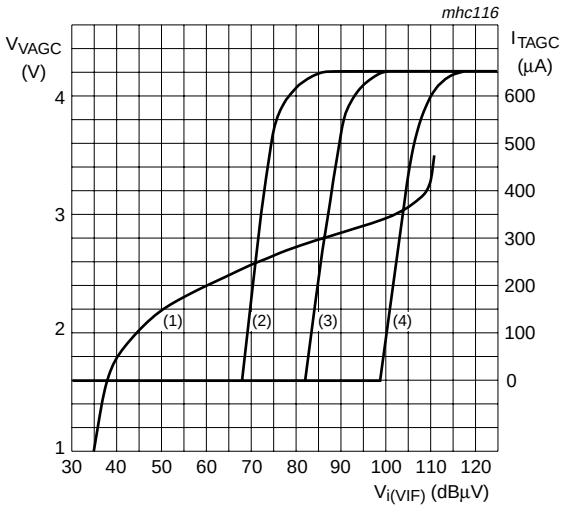

(1) V_{VAGC} is VIF AGC voltage and can be measured at pin VAGC.

(2) I_{TAGC} is tuner current in TV mode with R_{TOP} = 22 kΩ.

(3) I_{TAGC} is tuner current in TV mode with R_{TOP} = 10 kΩ.

(4) I_{TAGC} is tuner current in TV mode with R_{TOP} = 0 kΩ.

Fig 6. Typical VIF and tuner AGC characteristics.

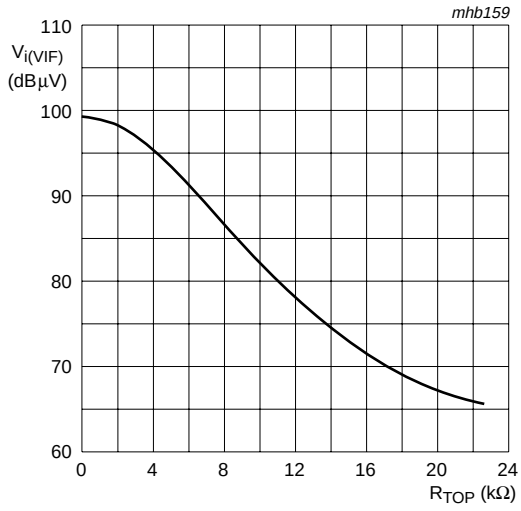

Fig 7. Typical tuner takeover point as a function of resistor R_{TOP}.

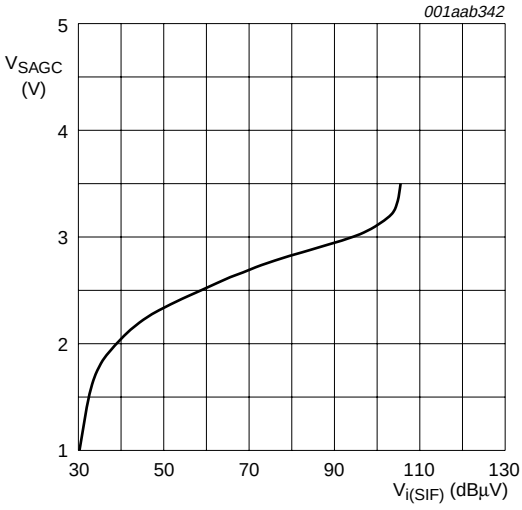

Fig 8. Typical SIF AGC characteristic.

© Koninklijke Philips Electronics N.V. 2004. All rights reserved.

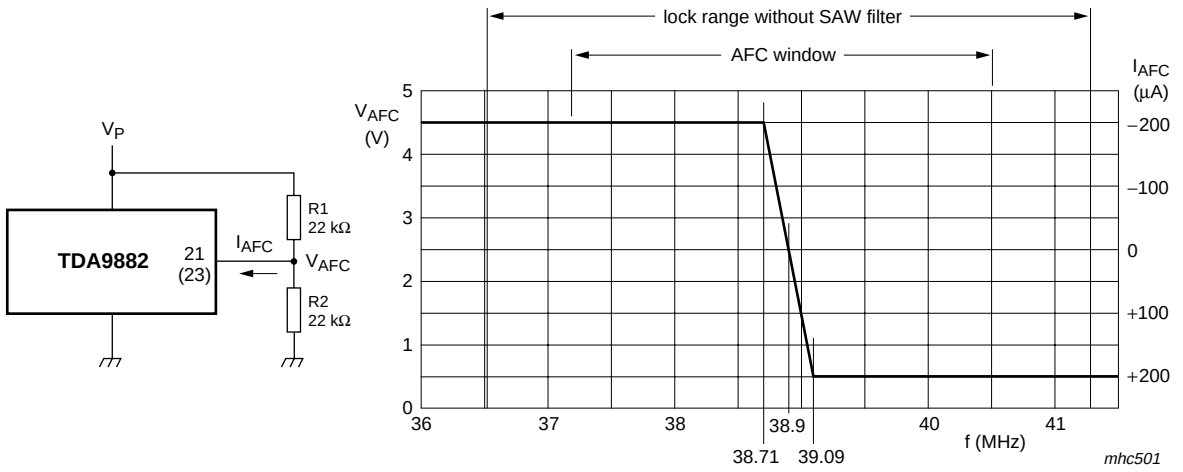

Pin numbers for TDA9882HN in parenthesis.

Fig 9. Typical analog AFC characteristic.

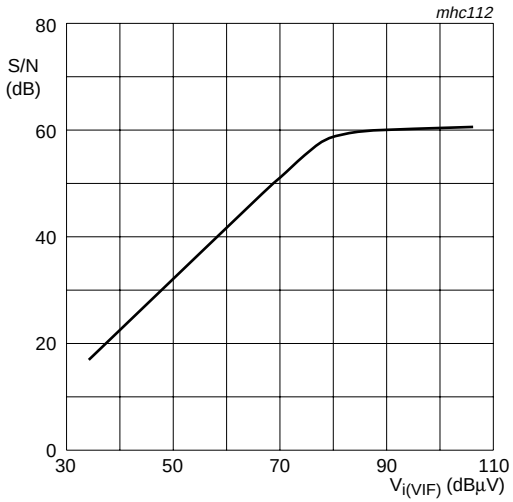

Fig 10. Typical signal-to-noise ratio as a function of VIF input voltage.

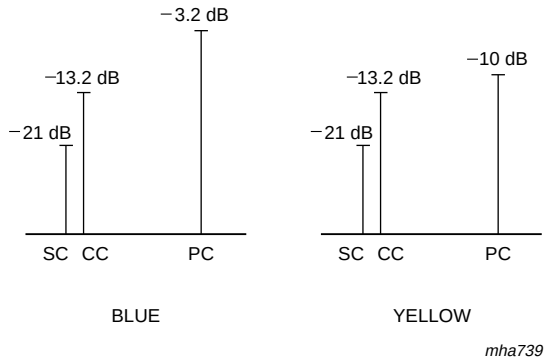

SC is sound carrier, with respect to sync level.

CC is chrominance carrier, with respect to sync level.

PC is picture carrier, with respect to sync level.

The sound carrier levels are taking into account a sound shelf attenuation of 14 dB (SAW filter G1984M).

Fig 11. Input signal conditions.

© Koninklijke Philips Electronics N.V. 2004. All rights reserved.

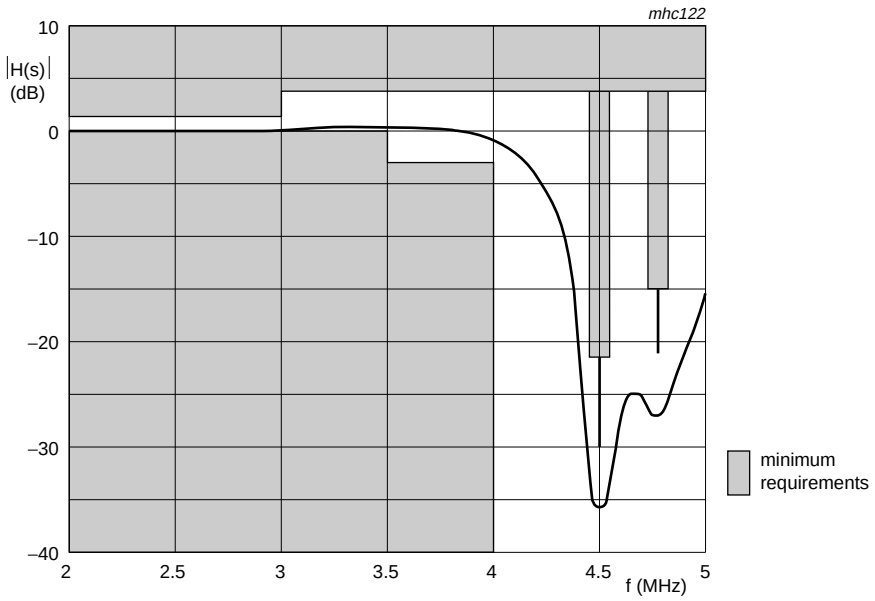

Fig 12. Typical amplitude response for sound trap at M/N standard (inclusive Korea).

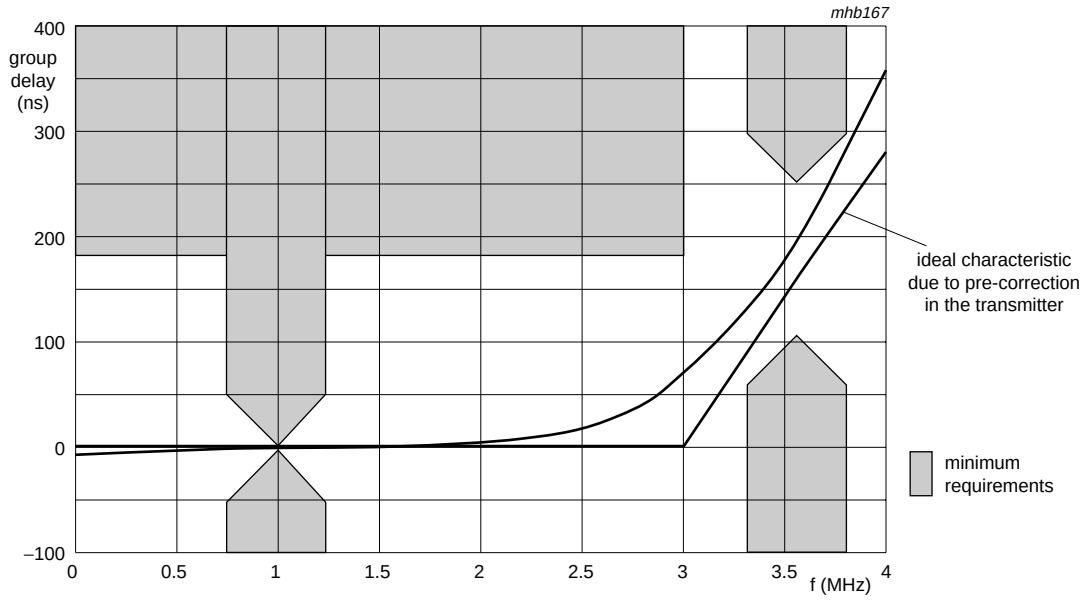

Overall delay is not shown, here the maximum ripple is specified.

Fig 13. Typical group delay for sound trap at M/N standard.

© Koninklijke Philips Electronics N.V. 2004. All rights reserved.

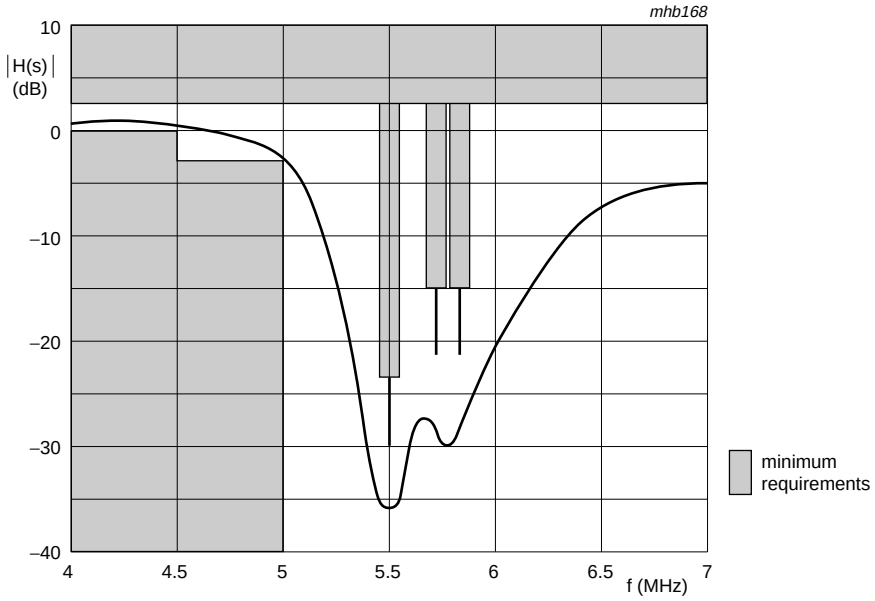

Fig 14. Typical amplitude response for sound trap at B/G standard.

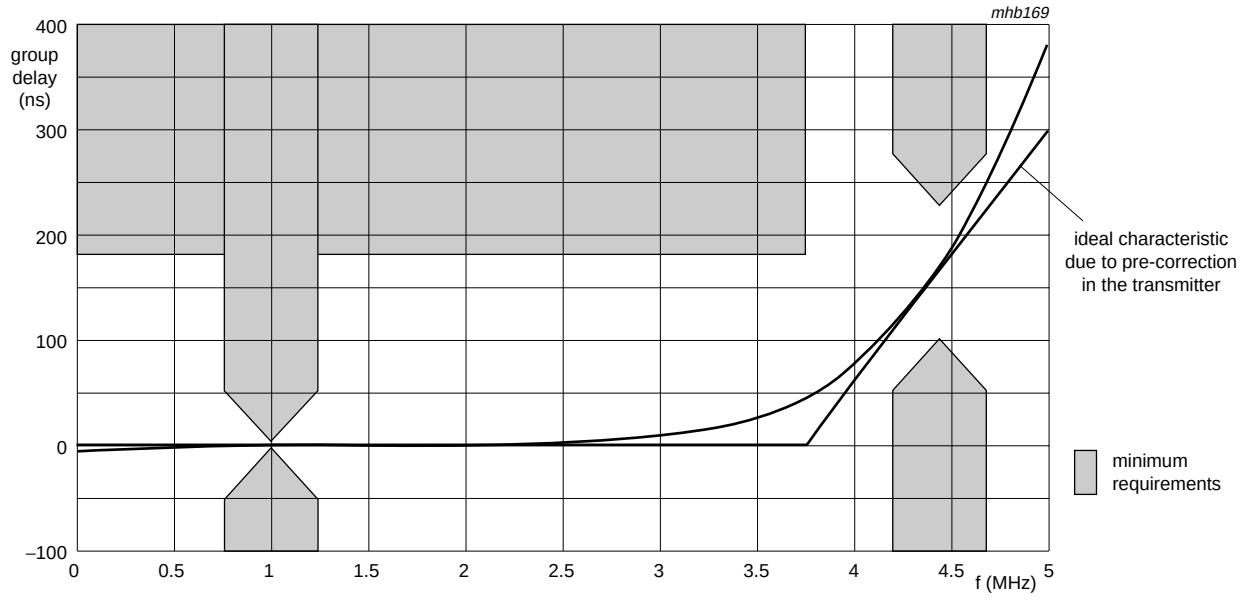

Overall delay is not shown, here the maximum ripple is specified.

Fig 15. Typical group delay for sound trap at B/G standard.

© Koninklijke Philips Electronics N.V. 2004. All rights reserved.

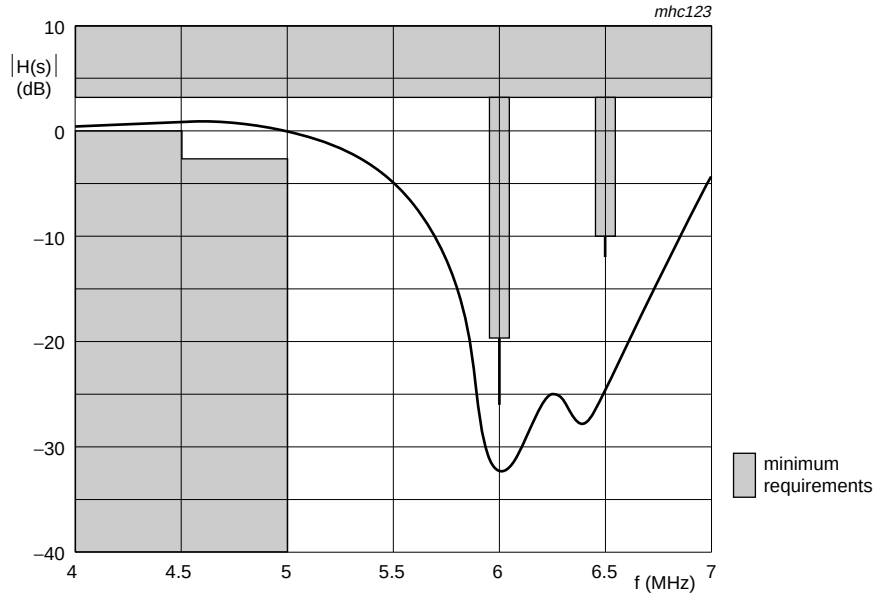

Fig 16. Typical amplitude response for sound trap at I standard.

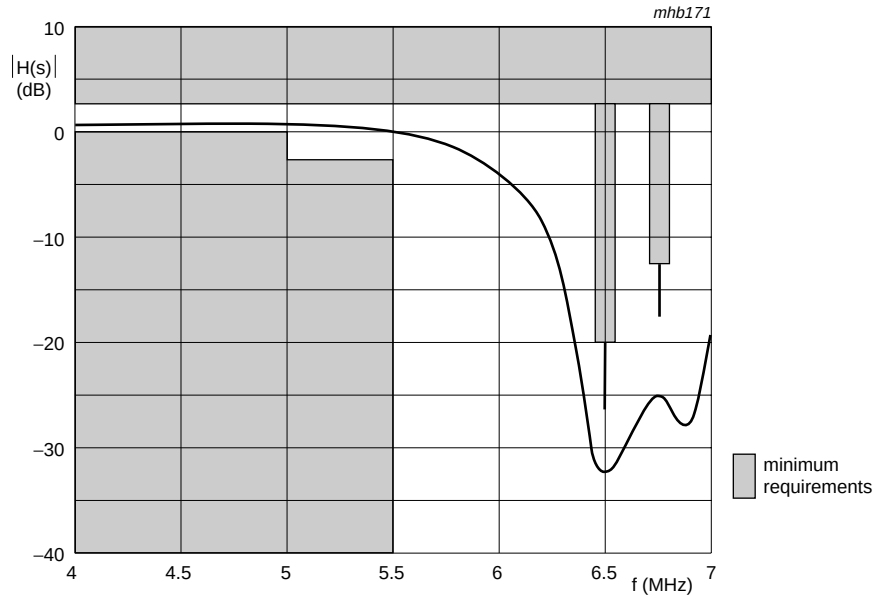

Fig 17. Typical amplitude response for sound trap at D/K, L and L-accent standard.

© Koninklijke Philips Electronics N.V. 2004. All rights reserved.

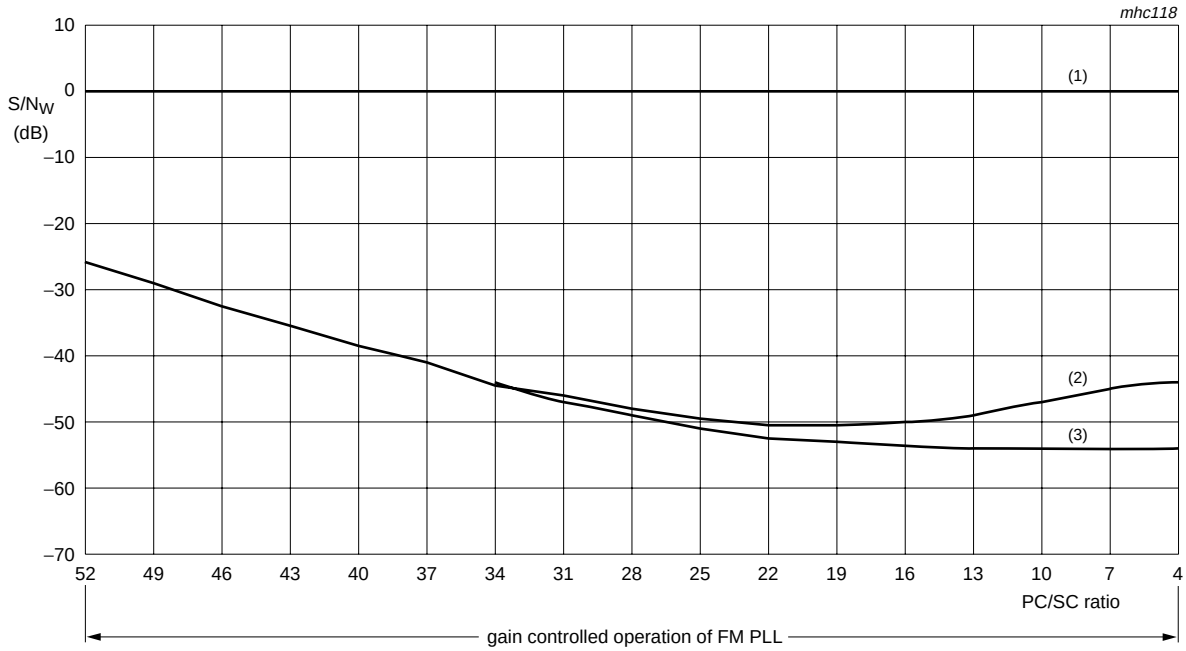

Conditions: PC/SC ratio is measured at pins VIF1 and VIF2; via transformer; 27 kHz FM deviation; 50 µs de-emphasis.

(1) Signal.

(2) Noise at H-picture (CCIR weighted quasi peak).

(3) Noise at black picture (CCIR weighted quasi peak).

Fig 18. Audio signal-to-noise ratio as a function of picture-to-sound carrier ratio in intercarrier mode.

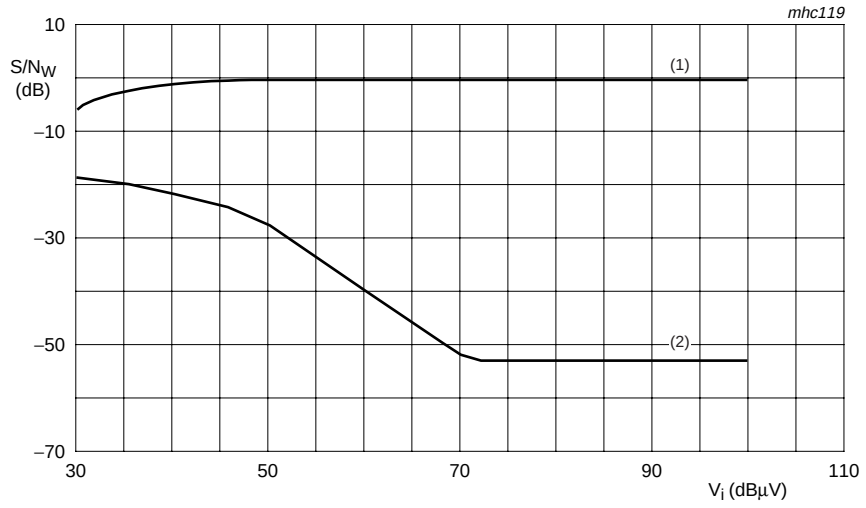

Condition: m = 54 %.

(1) Signal.

(2) Noise.

Fig 19. Typical audio signal-to-noise ratio as a function of input signal at AM standard.

© Koninklijke Philips Electronics N.V. 2004. All rights reserved.

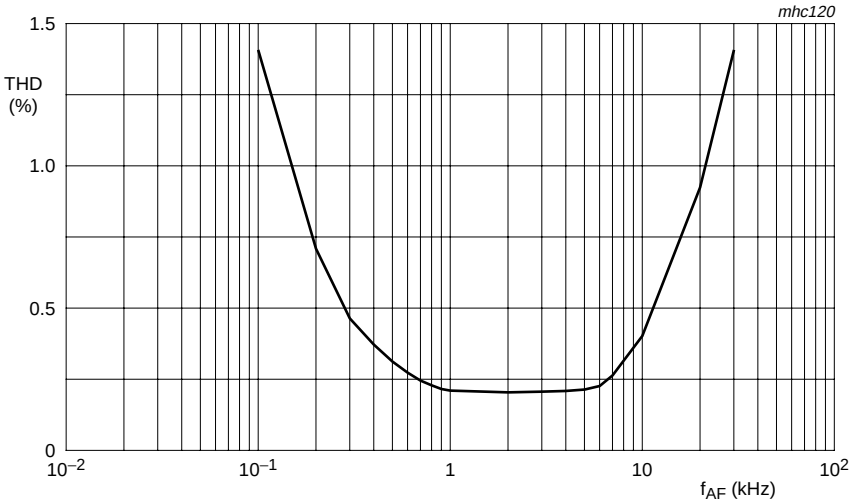

m = 54 %.

Fig 20. Typical total harmonic distortion as a function of audio frequency at AM standard.

© Koninklijke Philips Electronics N.V. 2004. All rights reserved.

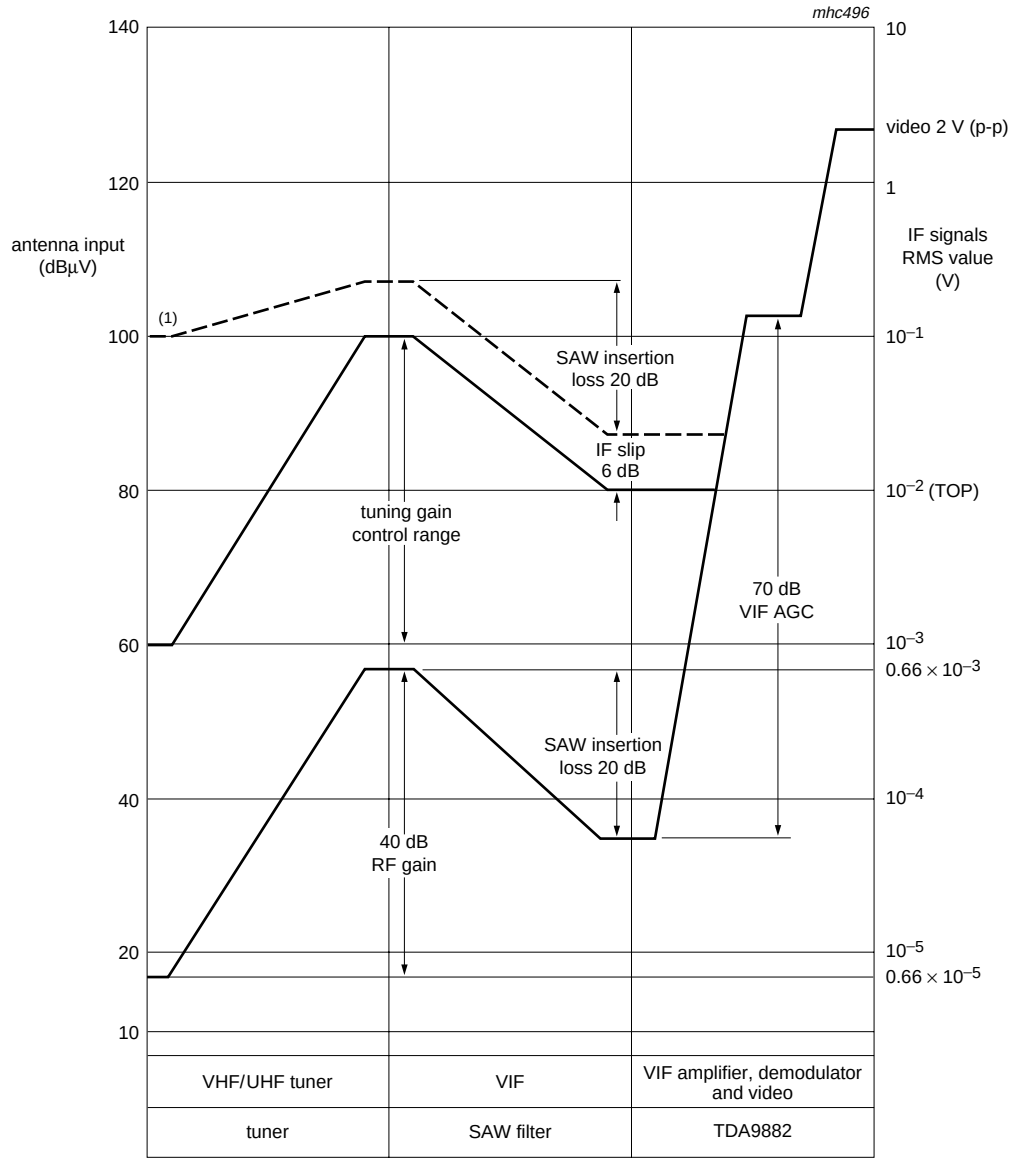

(1) Depends on TOP.

Fig 21. Front-end level diagram.

© Koninklijke Philips Electronics N.V. 2004. All rights reserved.

12. Application information

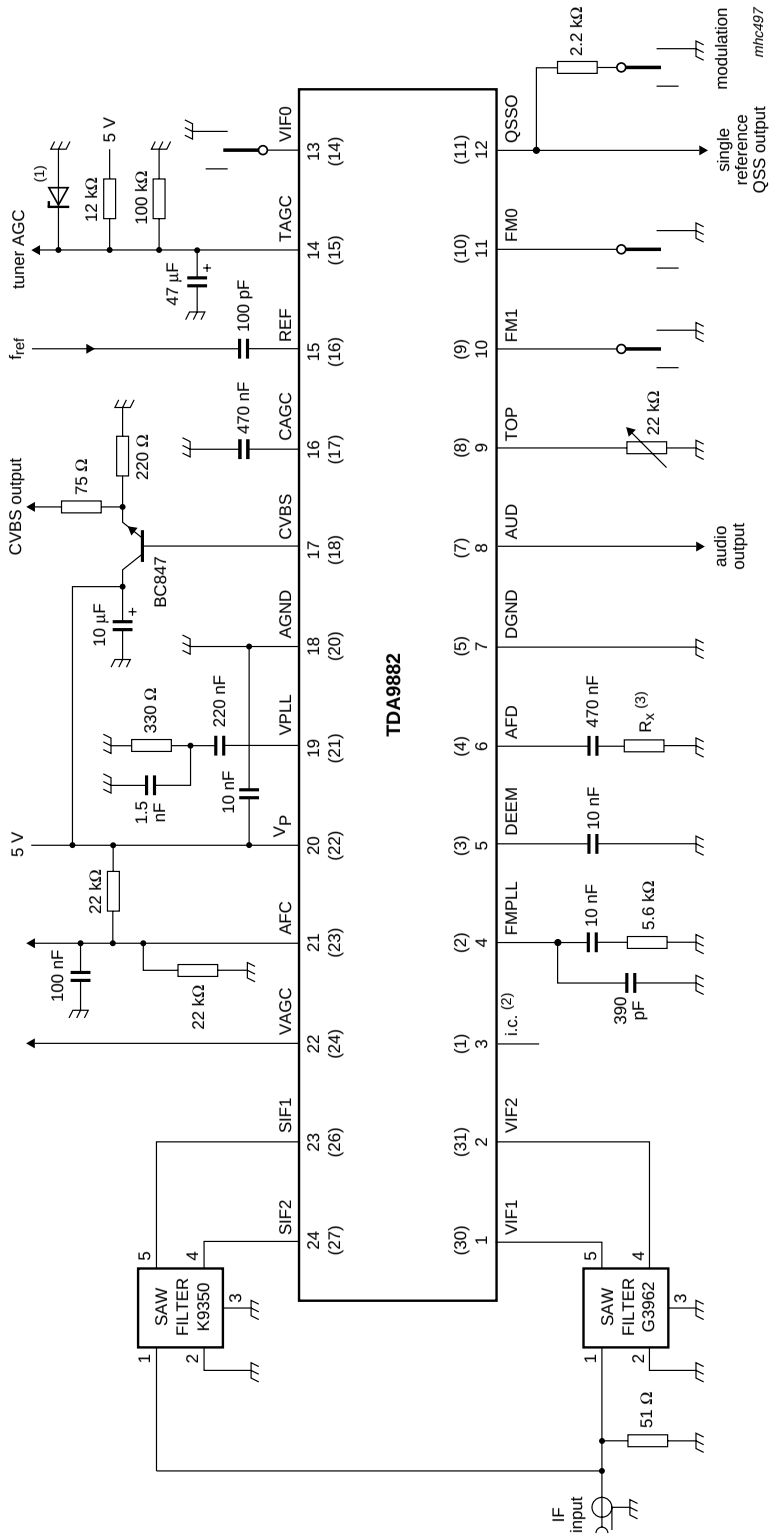

Pin numbers for TDA9882HN in parenthesis.

(1) Optional measures to improve ESD performance within a TV-set application.

(2) Internal connected; the pin must be left open-circuit.

(3) AF output signal reduction; see Table note 18 of Section 11.

Fig 22. Application diagram of TDA9882.

© Koninklijke Philips Electronics N.V. 2004. All rights reserved.

13. Test information

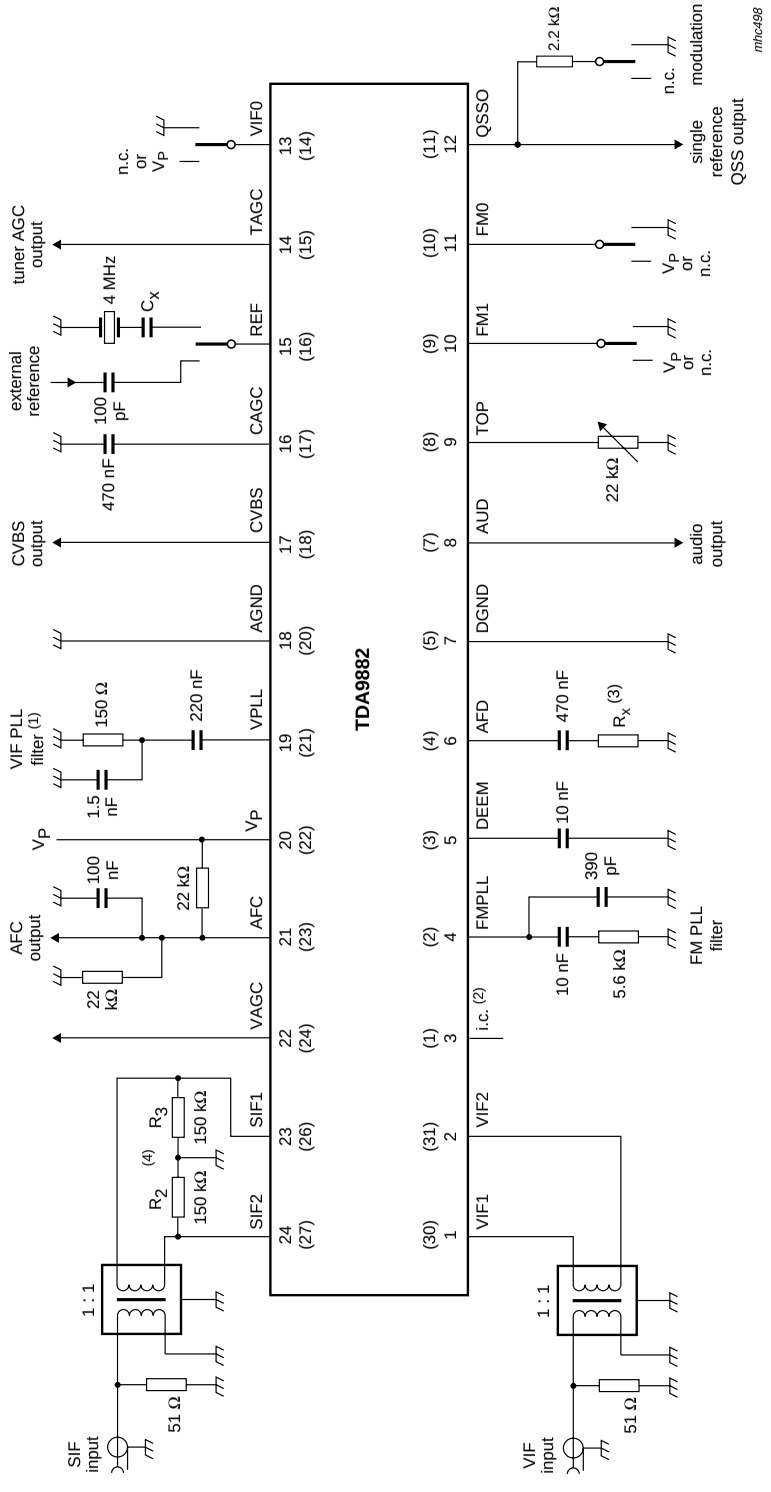

Pin numbers for TDA9882HN in parenthesis.

(1) Different VIF loop filter in comparison with the application circuit due to different input characteristics (SAW filter or transformer).

(2) Internal connected; the pin must be left open-circuit.

(3) AF output signal reduction; see Table note 18 of Section 11.

(4) Optional for auto mute disable (see Table 6); R2 and R3 not used: auto mute active; R2 = R3 = 150 kΩ: auto mute not active.

Fig 23. Test circuit.

© Koninklijke Philips Electronics N.V. 2004. All rights reserved.

14. Package outline

SSOP24: plastic shrink small outline package; 24 leads; body width 5.3 mm **SOT340-1**

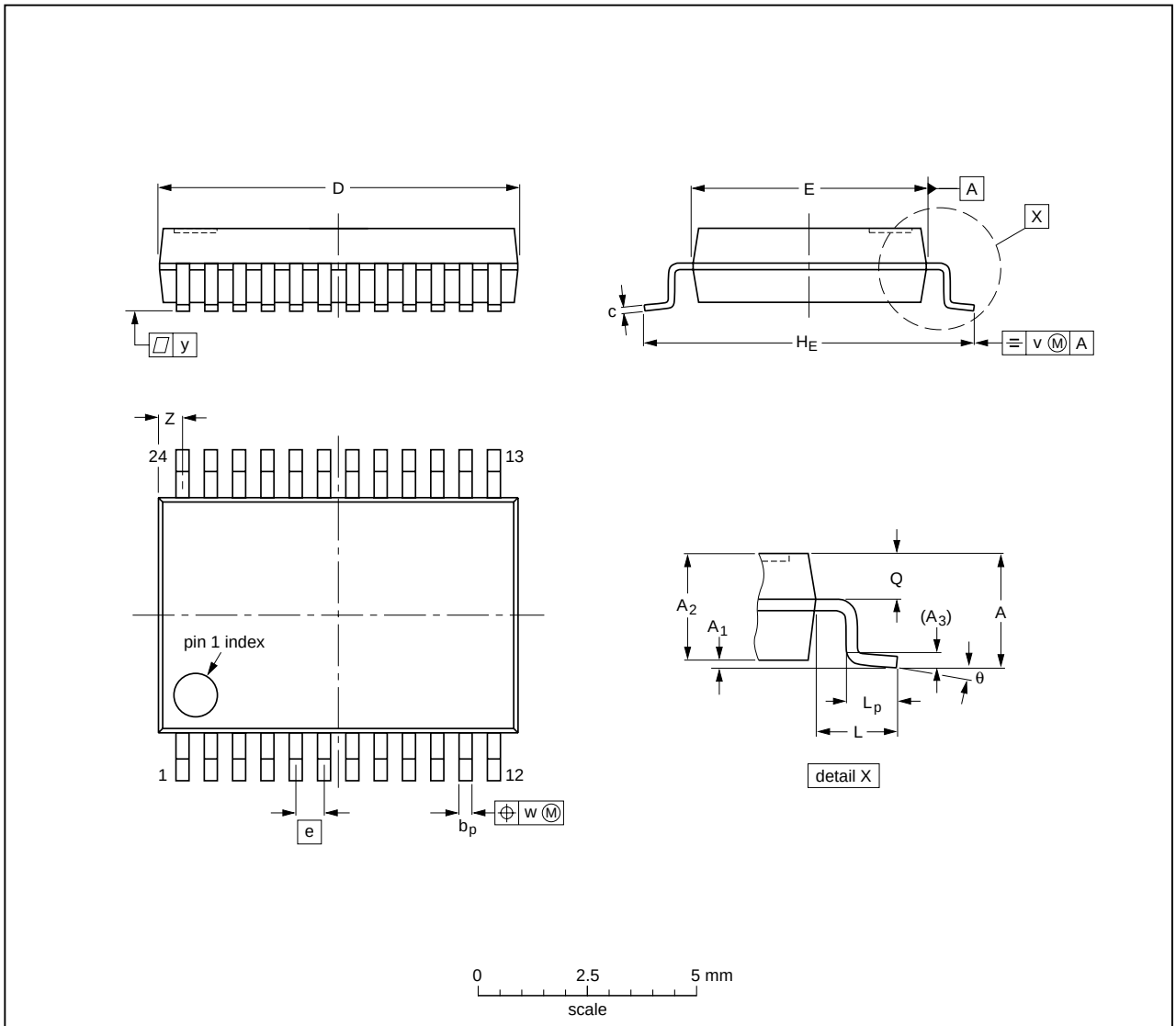

DIMENSIONS (mm are the original dimensions)

UNIT	A max.	A_1	A_2	A_3	b_p	c	$D^{(1)}$	$E^{(1)}$	e	H_E	L	L_p	Q	v	w	y	$Z^{(1)}$	θ
mm	2	0.21 0.05	1.80 1.65	0.25	0.38 0.25	0.20 0.09	8.4 8.0	5.4 5.2	0.65	7.9 7.6	1.25	1.03 0.63	0.9 0.7	0.2	0.13	0.1	0.8 0.4	8° 0°

Note

1. Plastic or metal protrusions of 0.2 mm maximum per side are not included.

OUTLINE VERSION	REFERENCES				EUROPEAN PROJECTION	ISSUE DATE
	IEC	JEDEC	JEITA			
SOT340-1		MO-150				~~99-12-27~~ 03-02-19

Fig 24. Package outline SOT340-1 (SSOP24).

© Koninklijke Philips Electronics N.V. 2004. All rights reserved.

HVQFN32: plastic thermal enhanced very thin quad flat package; no leads; 32 terminals; body 5 x 5 x 0.85 mm **SOT617-3**

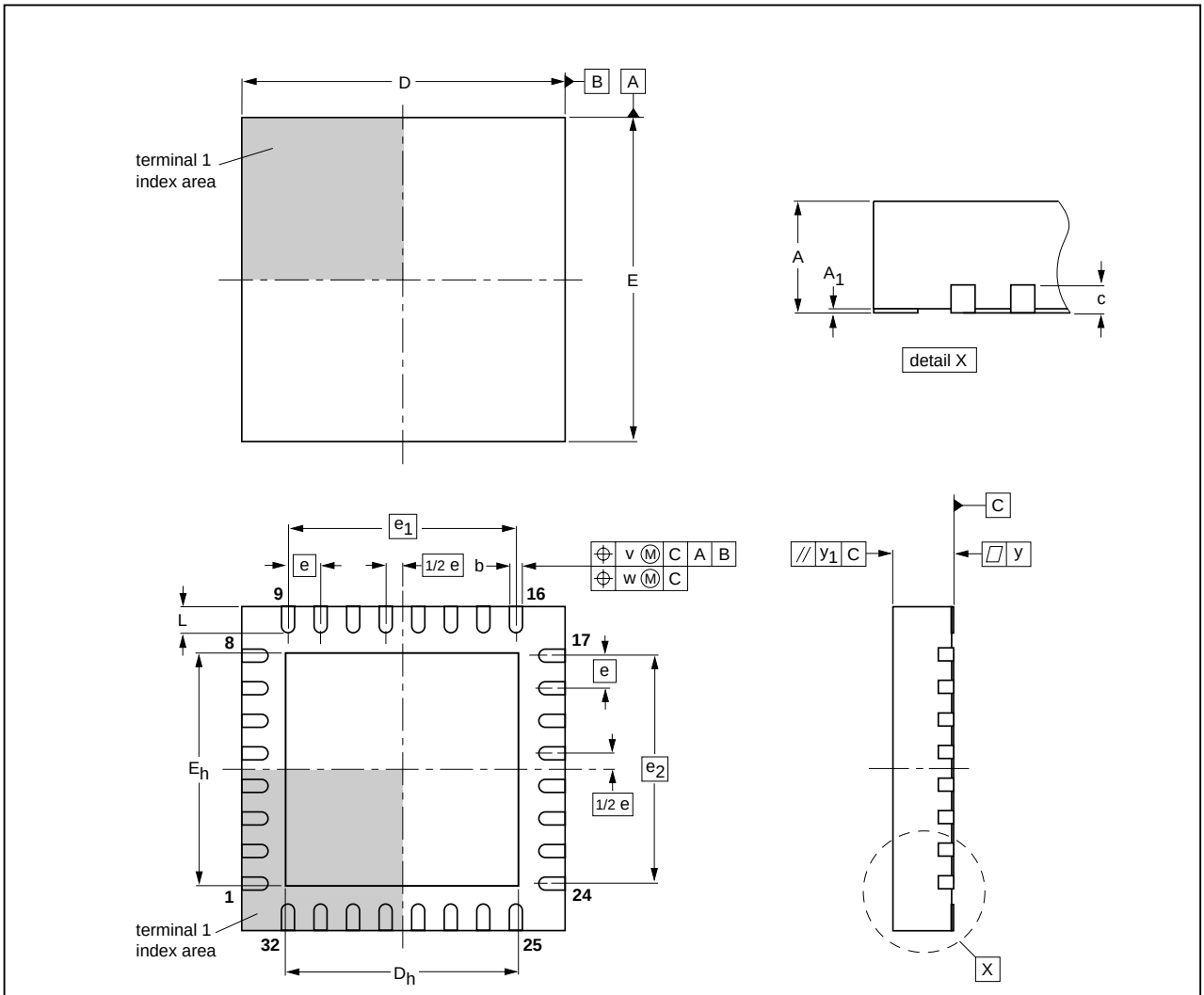

DIMENSIONS (mm are the original dimensions)

UNIT	A(1) max.	A_1	b	c	D(1)	D_h	E(1)	E_h	e	e_1	e_2	L	v	w	y	y_1
mm	1	0.05 0.00	0.30 0.18	0.2	5.1 4.9	3.75 3.45	5.1 4.9	3.75 3.45	0.5	3.5	3.5	0.5 0.3	0.1	0.05	0.05	0.1

Note

1. Plastic or metal protrusions of 0.075 mm maximum per side are not included.

OUTLINE VERSION	REFERENCES				EUROPEAN PROJECTION	ISSUE DATE
	IEC	JEDEC	JEITA			
SOT617-3	- - -	MO-220	- - -			~~02-04-18~~ 02-10-22

Fig 25. Package outline SOT617-3 (HVQFN32).

© Koninklijke Philips Electronics N.V. 2004. All rights reserved.

15. Soldering

15.1 Introduction to soldering surface mount packages

This text gives a very brief insight to a complex technology. A more in-depth account of soldering ICs can be found in our *Data Handbook IC26; Integrated Circuit Packages* (document order number 9398 652 90011).

There is no soldering method that is ideal for all surface mount IC packages. Wave soldering can still be used for certain surface mount ICs, but it is not suitable for fine pitch SMDs. In these situations reflow soldering is recommended.

15.2 Reflow soldering

Reflow soldering requires solder paste (a suspension of fine solder particles, flux and binding agent) to be applied to the printed-circuit board by screen printing, stencilling or pressure-syringe dispensing before package placement. Driven by legislation and environmental forces the worldwide use of lead-free solder pastes is increasing.

Several methods exist for reflowing; for example, convection or convection/infrared heating in a conveyor type oven. Throughput times (preheating, soldering and cooling) vary between 100 seconds and 200 seconds depending on heating method.

Typical reflow peak temperatures range from 215 °C to 270 °C depending on solder paste material. The top-surface temperature of the packages should preferably be kept:

- below 225 °C (SnPb process) or below 245 °C (Pb-free process)
  - for all BGA, HTSSON..T and SSOP..T packages
  - for packages with a thickness ≥ 2.5 mm
  - for packages with a thickness < 2.5 mm and a volume ≥ 350 mm^3 so called thick/large packages.
- below 240 °C (SnPb process) or below 260 °C (Pb-free process) for packages with a thickness < 2.5 mm and a volume < 350 mm^3 so called small/thin packages.

Moisture sensitivity precautions, as indicated on packing, must be respected at all times.

15.3 Wave soldering

Conventional single wave soldering is not recommended for surface mount devices (SMDs) or printed-circuit boards with a high component density, as solder bridging and non-wetting can present major problems.

To overcome these problems the double-wave soldering method was specifically developed.

If wave soldering is used the following conditions must be observed for optimal results:

- Use a double-wave soldering method comprising a turbulent wave with high upward pressure followed by a smooth laminar wave.
- For packages with leads on two sides and a pitch (e):
  - larger than or equal to 1.27 mm, the footprint longitudinal axis is **preferred** to be parallel to the transport direction of the printed-circuit board;

© Koninklijke Philips Electronics N.V. 2004. All rights reserved.

– smaller than 1.27 mm, the footprint longitudinal axis **must** be parallel to the transport direction of the printed-circuit board.

The footprint must incorporate solder thieves at the downstream end.

- For packages with leads on four sides, the footprint must be placed at a 45° angle to the transport direction of the printed-circuit board. The footprint must incorporate solder thieves downstream and at the side corners.

During placement and before soldering, the package must be fixed with a droplet of adhesive. The adhesive can be applied by screen printing, pin transfer or syringe dispensing. The package can be soldered after the adhesive is cured.

Typical dwell time of the leads in the wave ranges from 3 seconds to 4 seconds at 250 °C or 265 °C, depending on solder material applied, SnPb or Pb-free respectively.

A mildly-activated flux will eliminate the need for removal of corrosive residues in most applications.

15.4 Manual soldering

Fix the component by first soldering two diagonally-opposite end leads. Use a low voltage (24 V or less) soldering iron applied to the flat part of the lead. Contact time must be limited to 10 seconds at up to 300 °C.

When using a dedicated tool, all other leads can be soldered in one operation within 2 seconds to 5 seconds between 270 °C and 320 °C.

15.5 Package related soldering information

Table 12: Suitability of surface mount IC packages for wave and reflow soldering methods

Package [1]	Soldering method	
	Wave	Reflow [2]
BGA, HTSSON..T [3], LBGA, LFBGA, SQFP, SSOP..T [3], TFBGA, VFBGA, XSON	not suitable	suitable
DHVQFN, HBCC, HBGA, HLQFP, HSO, HSOP, HSQFP, HSSON, HTQFP, HTSSOP, HVQFN, HVSON, SMS	not suitable [4]	suitable
PLCC [5], SO, SOJ	suitable	suitable
LQFP, QFP, TQFP	not recommended [5] [6]	suitable
SSOP, TSSOP, VSO, VSSOP	not recommended [7]	suitable
CWQCCN..L [8], PMFP [9], WQCCN..L [8]	not suitable	not suitable

[1] For more detailed information on the BGA packages refer to the *(LF)BGA Application Note* (AN01026); order a copy from your Philips Semiconductors sales office.

[2] All surface mount (SMD) packages are moisture sensitive. Depending upon the moisture content, the maximum temperature (with respect to time) and body size of the package, there is a risk that internal or external package cracks may occur due to vaporization of the moisture in them (the so called popcorn effect). For details, refer to the Drypack information in the *Data Handbook IC26; Integrated Circuit Packages; Section: Packing Methods*.

[3] These transparent plastic packages are extremely sensitive to reflow soldering conditions and must on no account be processed through more than one soldering cycle or subjected to infrared reflow soldering with peak temperature exceeding 217 °C ± 10 °C measured in the atmosphere of the reflow oven. The package body peak temperature must be kept as low as possible.

© Koninklijke Philips Electronics N.V. 2004. All rights reserved.

[4] These packages are not suitable for wave soldering. On versions with the heatsink on the bottom side, the solder cannot penetrate between the printed-circuit board and the heatsink. On versions with the heatsink on the top side, the solder might be deposited on the heatsink surface.

[5] If wave soldering is considered, then the package must be placed at a 45° angle to the solder wave direction. The package footprint must incorporate solder thieves downstream and at the side corners.

[6] Wave soldering is suitable for LQFP, QFP and TQFP packages with a pitch (e) larger than 0.8 mm; it is definitely not suitable for packages with a pitch (e) equal to or smaller than 0.65 mm.

[7] Wave soldering is suitable for SSOP, TSSOP, VSO and VSSOP packages with a pitch (e) equal to or larger than 0.65 mm; it is definitely not suitable for packages with a pitch (e) equal to or smaller than 0.5 mm.

[8] Image sensor packages in principle should not be soldered. They are mounted in sockets or delivered pre-mounted on flex foil. However, the image sensor package can be mounted by the client on a flex foil by using a hot bar soldering process. The appropriate soldering profile can be provided on request.

[9] Hot bar soldering or manual soldering is suitable for PMFP packages.

© Koninklijke Philips Electronics N.V. 2004. All rights reserved.

16. Revision history

Table 13: Revision history

Document ID	Release date	Data sheet status	Change notice	Doc. number	Supersedes
TDA9882_1	20041116	Product data sheet	-	9397 750 13507	-

© Koninklijke Philips Electronics N.V. 2004. All rights reserved.

17. Data sheet status

Level	Data sheet status [1]	Product status [2] [3]	Definition
I	Objective data	Development	This data sheet contains data from the objective specification for product development. Philips Semiconductors reserves the right to change the specification in any manner without notice.
II	Preliminary data	Qualification	This data sheet contains data from the preliminary specification. Supplementary data will be published at a later date. Philips Semiconductors reserves the right to change the specification without notice, in order to improve the design and supply the best possible product.
III	Product data	Production	This data sheet contains data from the product specification. Philips Semiconductors reserves the right to make changes at any time in order to improve the design, manufacturing and supply. Relevant changes will be communicated via a Customer Product/Process Change Notification (CPCN).

[1] Please consult the most recently issued data sheet before initiating or completing a design.

[2] The product status of the device(s) described in this data sheet may have changed since this data sheet was published. The latest information is available on the Internet at URL http://www.semiconductors.philips.com.

[3] For data sheets describing multiple type numbers, the highest-level product status determines the data sheet status.

18. Definitions

Short-form specification — The data in a short-form specification is extracted from a full data sheet with the same type number and title. For detailed information see the relevant data sheet or data handbook.

Limiting values definition — Limiting values given are in accordance with the Absolute Maximum Rating System (IEC 60134). Stress above one or more of the limiting values may cause permanent damage to the device. These are stress ratings only and operation of the device at these or at any other conditions above those given in the Characteristics sections of the specification is not implied. Exposure to limiting values for extended periods may affect device reliability.

Application information — Applications that are described herein for any of these products are for illustrative purposes only. Philips Semiconductors make no representation or warranty that such applications will be suitable for the specified use without further testing or modification.

19. Disclaimers

Life support — These products are not designed for use in life support appliances, devices, or systems where malfunction of these products can reasonably be expected to result in personal injury. Philips Semiconductors customers using or selling these products for use in such applications do so at their own risk and agree to fully indemnify Philips Semiconductors for any damages resulting from such application.

Right to make changes — Philips Semiconductors reserves the right to make changes in the products - including circuits, standard cells, and/or software - described or contained herein in order to improve design and/or performance. When the product is in full production (status ‘Production’), relevant changes will be communicated via a Customer Product/Process Change Notification (CPCN). Philips Semiconductors assumes no responsibility or liability for the use of any of these products, conveys no license or title under any patent, copyright, or mask work right to these products, and makes no representations or warranties that these products are free from patent, copyright, or mask work right infringement, unless otherwise specified.

20. Contact information

For additional information, please visit: **http://www.semiconductors.philips.com**

For sales office addresses, send an email to: **sales.addresses@www.semiconductors.philips.com**

© Koninklijke Philips Electronics N.V. 2004. All rights reserved.

21. Contents

1	**General description**	**1**
2	**Features**	**1**
3	**Applications**	**2**
4	**Quick reference data**	**2**
5	**Ordering information**	**3**
6	**Block diagram**	**4**
7	**Pinning information**	**5**
7.1	Pinning	5
7.2	Pin description	6
8	**Functional description**	**7**
8.1	VIF amplifier	7
8.2	Tuner AGC and VIF AGC	7
8.3	VIF AGC detector	7
8.4	FPLL detector	8
8.5	VCO and divider	8
8.6	AFC and digital acquisition help circuit	8
8.7	Video demodulator and amplifier	9
8.8	Sound carrier trap	9
8.9	SIF amplifier	10
8.10	SIF AGC detector	10
8.11	Single reference QSS mixer	10
8.12	AM demodulator	10
8.13	FM demodulator and acquisition help circuit	10
8.14	Audio amplifier and mute time constant	11
8.15	Internal voltage stabilizer	12
8.16	Logic	12
9	**Limiting values**	**13**
10	**Thermal characteristics**	**13**
11	**Characteristics**	**13**
12	**Application information**	**36**
13	**Test information**	**37**
14	**Package outline**	**38**
15	**Soldering**	**40**
15.1	Introduction to soldering surface mount packages	40
15.2	Reflow soldering	40
15.3	Wave soldering	40
15.4	Manual soldering	41
15.5	Package related soldering information	41
16	**Revision history**	**43**
17	**Data sheet status**	**44**
18	**Definitions**	**44**
19	**Disclaimers**	**44**
20	**Contact information**	**44**

© Koninklijke Philips Electronics N.V. 2004

All rights are reserved. Reproduction in whole or in part is prohibited without the prior written consent of the copyright owner. The information presented in this document does not form part of any quotation or contract, is believed to be accurate and reliable and may be changed without notice. No liability will be accepted by the publisher for any consequence of its use. Publication thereof does not convey nor imply any license under patent- or other industrial or intellectual property rights.

Date of release: 16 November 2004
Document number: 9397 750 13507

Published in The Netherlands